GIGABYTE™

R281-Z94

AMD EPYC™ 7003 DP Server System - 2U 12-Bay

User Manual

Rev. 1.0

Copyright

© 2021 GIGA-BYTE TECHNOLOGY CO., LTD. All rights reserved.
The trademarks mentioned in this manual are legally registered to their respective owners.

Disclaimer

Information in this manual is protected by copyright laws and is the property of GIGABYTE. Changes to the specifications and features in this manual may be made by GIGABYTE without prior notice. No part of this manual may be reproduced, copied, translated, transmitted, or published in any form or by any means without GIGABYTE's prior written permission.

Documentation Classifications

In order to assist in the use of this product, GIGABYTE provides the following types of documentation:

- User Manual: detailed information & steps about the installation, configuration and use of this product (e.g. motherboard, server barebones), covering hardware and BIOS.
- User Guide: detailed information about the installation & use of an add-on hardware or software component (e.g. BMC firmware, rail-kit) compatible with this product.
- Quick Installation Guide: a short guide with visual diagrams that you can reference easily for installation purposes of this product (e.g. motherboard, server barebones).

Please see the support section of the online product page to check the current availability of these documents

For More Information

For related product specifications, the latest firmware and software, and related information, please visit our website at:

http://www.gigabyte.com

For GIGABYTE distributors and resellers, additional sales & marketing materials are available from our reseller portal at:

http://reseller.b2b.gigabyte.com

For further information & technical assistance, please contact your GIGABYTE sales representative. You may also message GIGABYTE server directly by email, Facebook or twitter.

Email: server.grp@gigabyte.com
Facebook: https://www.facebook.com/gigabyteserver
Twitter: https://twitter.com/GIGABYTEServer

Conventions

The following conventions are used in this user's guide:

	**NOTE!** Gives bits and pieces of additional information related to the current topic.
	**CAUTION!** Gives precautionary measures to avoid possible hardware or software problems.
	**WARNING!** Alerts you to any damage that might result from doing or not doing specific actions.

Server Warnings and Cautions

Before installing a server, be sure that you understand the following warnings and cautions.

WARNING!

To reduce the risk of electric shock or damage to the equipment:

- Do not disable the power cord grounding plug. The grounding plug is an important safety feature.
- Plug the power cord into a grounded (earthed) electrical outlet that is easily accessible at all times.
- Unplug all the power cords from the power supplies to disconnect power to the equipment.
-
-
- 
- Shock Hazard! Disconnect all power supply cords before servicing.
- Do not route the power cord where it can be walked on or pinched by items placed against it. Pay particular attention to the plug, electrical outlet, and the point where the cord extends from the server.

WARNING!

To reduce the risk of personal injury from hot surfaces, allow the drives and the internal system components to cool before touching them.

WARNING!

This server is equipped with high speed fans. Keep away from hazardous moving fan blades during servicing.

CAUTION!

- Do not operate the server for long periods with the access panel open or removed. Operating the server in this manner results in improper airflow and improper cooling that can lead to thermal damage.
- Danger of explosion if battery is incorrectly replaced.
- Replace only with the same or equivalent type recommended by the manufacturer.
- Dispose of used batteries according to the manufacturer's instructions.

Electrostatic Discharge (ESD)

CAUTION!

ESD CAN DAMAGE DRIVES, BOARDS, AND OTHER PARTS. WE RECOMMEND THAT YOU PERFORM ALL PROCEDURES AT AN ESD WORKSTATION. IF ONE IS NOT AVAILABLE, PROVIDE SOME ESD PROTECTION BY WEARING AN ANTI-STATIC WRIST STRAP ATTACHED TO CHASSIS GROUND -- ANY UNPAINTED METAL SURFACE -- ON YOUR SERVER WHEN HANDLING PARTS.

Always handle boards carefully. They can be extremely sensitive to ESD. Hold boards only by their edges without any component and pin touching. After removing a board from its protective wrapper or from the system, place the board component side up on a grounded, static free surface. Use a conductive foam pad if available but not the board wrapper. Do not slide board over any surface.

System power on/off: To remove power from system, you must remove the system from rack. Make sure the system is removed from the rack before opening the chassis, adding, or removing any non hot-plug components.

Hazardous conditions, devices and cables: Hazardous electrical conditions may be present on power, telephone, and communication cables. Turn off the system and disconnect the cables attached to the system before servicing it. Otherwise, personal injury or equipment damage can result.

Electrostatic discharge (ESD) and ESD protection: ESD can damage drives, boards, and other parts. We recommend that you perform all procedures in this chapter only at an ESD workstation. If one is not available, provide some ESD protection by wearing an antistatic wrist strap attached to chassis ground (any unpainted metal surface on the server) when handling parts.

ESD and handling boards: Always handle boards carefully. They can be extremely sensitive to electrostatic discharge (ESD). Hold boards only by their edges. After removing a board from its protective wrapper or from the system, place the board component side up on a grounded, static free surface. Use a conductive foam pad if available but not the board wrapper. Do not slide board over any surface.

Installing or removing jumpers: A jumper is a small plastic encased conductor that slips over two jumper pins. Some jumpers have a small tab on top that can be gripped with fingertips or with a pair of fine needle nosed pliers. If the jumpers do not have such a tab, take care when using needle nosed pliers to remove or install a jumper; grip the narrow sides of the jumper with the pliers, never the wide sides. Gripping the wide sides can dam-age the contacts inside the jumper, causing intermittent problems with the function con-trolled by that jumper. Take care to grip with, but not squeeze, the pliers or other tool used to remove a jumper, or the pins on the board may bend or break.



CAUTION!

Risk of explosion if battery is replaced incorrectly or with an incorrect type. Replace the battery only with the same or equivalent type recommended by the manufacturer. Dispose of used batteries according to the manufacturer's instructions.

Table of Contents

Chapter 1 Hardware Installation 11
1-1 Installation Precautions 11
1-2 Product Specifications 12
1-3 System Block Diagram 16
Chapter 2 System Appearance 17
2-1 Front View 17
2-2 Rear View 17
2-3 Front Panel LED and Buttons 18
2-4 Rear System LAN LEDs 20
2-5 Hard Disk Drive LEDs 21
2-6 Power Supply Unit LED 22
Chapter 3 System Hardware Installation 23
3-1 Removing and Installing the Chassis Cover 24
3-2 Removing and Installing the Fan Duct 25
3-3 Removing and Installing the CPU and Heat Sink 26
3-4 Removing and Installing Memory 28
3-4-1 Eight-Channel Memory Configuration 28
3-4-2 Removing and Installing a Memory Module 29
3-4-3 Processor and Memory Module Matrix Table 29
3-4-4 DIMM Population Table 30
3-5 Removing and Installing the PCI Expansion Card 32
3-6 Removing and Installing the Hard Disk Drive 34
3-7 Installing and Removing an M.2 Solid State Drive 36
3-8 Replacing the Fan Assembly 37
3-9 Removing and Installing the Power Supply 38
3-10 Cable Routing 39
Chapter 4 Motherboard Components 41
4-1 Motherboard Components 41
4-2 Jumper Settings 43
4-3 Thermal Mapping Table 44
Chapter 5 BIOS Setup 45
5-1 The Main Menu 47
5-2 Advanced Menu 50
5-2-1 Trusted Computing 51

5-2-2 PSP Firmware Versions....52
5-2-3 Legacy Video Select....53
5-2-4 AST2500 Super IO Configuration....54
5-2-5 S5 RTC Wake Settings....56
5-2-6 Serial Port Console Redirection....57
5-2-7 CPU Configuration....60
5-2-8 PCI Subsystem Settings....61
5-2-9 USB Configuration....63
5-2-10 Network Stack Configuration....65
5-2-11 NVMe Configuration....66
5-2-12 Offboard SATA Controller Configuration....67
5-2-13 SATA Configuration....68
5-2-14 Graphic Output Configuration....69
5-2-15 AMD Mem Configuration Status....70
5-2-16 Tls Auth Configuration....71
5-2-17 iSCSI Configuration....72
5-2-18 Intel(R) I350 Gigabit Network Connection....73
5-2-19 VLAN Configuration....75
5-2-20 MAC IPv4 Network Configuration....77
5-2-21 MAC IPv6 Network Configuration....78
5-3 AMD CBS Menu....79
5-3-1 CPU Common Options....80
5-3-2 DF Common Options....83
5-3-3 UMC Common Options....86
5-3-4 NBIO Common Options....88
5-3-5 FCH Common Options....93
5-3-6 NTB Common Options....96
5-3-7 SOC Miscellaneous Control....97
5-4 AMD PBS Option Menu....98
5-4-1 RAS....99
5-5 Chipset Setup Menu....101
5-6 Server Management Menu....102
5-6-1 System Event Log....104
5-6-2 View FRU Information....105
5-6-3 BMC Network Configuration....106
5-6-4 IPv6 BMC Network Configuration....107
5-7 Security Menu....108
5-7-1 Secure Boot....109
5-8 Boot Menu....111
5-8-1 UEFI NETWORK Drive BBS Priorities....113
5-8-2 UEFI Application Boot Priorities....114

5-9 Save & Exit Menu 115
5-10 BIOS POST Beep code (AMI standard) 116
5-10-1 PEI Beep Codes 116
5-10-2 DXE Beep Codes 116

This page intentionally left blank

Chapter 1 Hardware Installation

1-1 Installation Precautions

The motherboard/system contain numerous delicate electronic circuits and components which can become damaged as a result of electrostatic discharge (ESD). Prior to installation, carefully read the user manual and follow these procedures:

- Prior to installation, do not remove or break motherboard S/N (Serial Number) sticker or warranty sticker provided by your dealer. These stickers are required for warranty validation.
- Always remove the AC power by unplugging the power cord from the power outlet before installing or removing the motherboard or other hardware components.
- When connecting hardware components to the internal connectors on the motherboard, make sure they are connected tightly and securely.
- When handling the motherboard, avoid touching any metal leads or connectors.
- It is best to wear an electrostatic discharge (ESD) wrist strap when handling electronic components such as a motherboard, CPU or memory. If you do not have an ESD wrist strap, keep your hands dry and first touch a metal object to eliminate static electricity.
- Prior to installing the motherboard, please have it on top of an antistatic pad or within an electrostatic shielding container.
- Before unplugging the power supply cable from the motherboard, make sure the power supply has been turned off.
- Before turning on the power, make sure the power supply voltage has been set according to the local voltage standard.
- Before using the product, please verify that all cables and power connectors of your hardware components are connected.
- To prevent damage to the motherboard, do not allow screws to come in contact with the motherboard circuit or its components.
- Make sure there are no leftover screws or metal components placed on the motherboard or within the computer casing.
- Do not place the computer system on an uneven surface.
- Do not place the computer system in a high-temperature environment.
- Turning on the computer power during the installation process can lead to damage to system components as well as physical harm to the user.
- If you are uncertain about any installation steps or have a problem related to the use of the product, please consult a certified computer technician.

1-2 Product Specifications

CPU	◆ AMD EPYC™ 7003 series processor family ◆ Dual processors, 7nm, Socket SP3 ◆ Up to 64-core, 128 threads per processor ◆ TDP up to 225W, , cTDP up to 240W ◆ Conditional support 280W ◆ Compatible with AMD EPYC™ 7002 series processor family NOTE: If only 1 CPU is installed, some PCIe or memory functions might be unavailable
Chipset	◆ System on Chip
Memory	◆ 32 x DIMM slots ◆ DDR4 memory supported only ◆ 8-Channel memory architecture ◆ RDIMM modules up to 128GB supported ◆ LRDIMM modules up to 128GB supported ◆ Memory speed: 3200*/ 2933 MHz ◆ 3DS RDIMM/LRDIMM modules up to 256GB supported Note: Follow BIOS setting and memory QVL list if running 3200 Mhz with 2DPC
LAN	◆ 2 x 1GbE LAN ports (1 x Intel® I350-AM2) ◆ 1 x 10/100/1000 management LAN
Video	◆ Integrated in Aspeed® AST2500 ◆ 2D Video Graphic Adapter with PCIe bus interface ◆ 1920x1200@60Hz 32bpp
RAID	◆ Depends on RAID card
Storage	◆ 12 x 3.5" / 2.5" SATA/SAS hot-swappable HDD/SSD bays ◆ Default configuration supports: ◆ 4 x SATA drives available, 8 x SAS/ SATA drives via optional SAS card ◆ SAS card is required to enable the drive bays Recommended SAS card: ◆ CRA4448 ◆ CRA3338

Expansion Slot	Riser Card CRS2133: ◆ 1 x PCIe x16 slot (Gen3 x16 or x8), Full height full-length ◆ 1 x PCIe x8 slots (Gen3 x0 or x8), Full height full-length ◆ 1 x PCIe x8 slots (Gen3 x8), Full height half-length Riser Card CRS2134: ◆ 1 x PCIe x16 slot (Gen3 x16 or x8), Full height full-length ◆ 1 x PCIe x8 slots (Gen3 x0 or x8), Full height full-length ◆ 1 x PCIe x8 slots (Gen3 x8), Full height half-length Riser Card CRS2123: ◆ 1 x PCIe x8 slots (Gen3 x0 or x8), Full height full-length ◆ 1 x PCIe x16 slot (Gen3 x16 or x8), Full height full-length 2 x OCP mezzanine slots ◆ PCIe Gen3 x16 ◆ Type1, P1, P2, P3, P4, K2, K3 1 x M.2 slot: ◆ M-key ◆ PCIe Gen3 x4 ◆ Supports NGFF-2242/2260/2280 cards ◆ CPU TDP is limited to 180W if using M.2 device (NOTE) - System is validated for population with a uniform GPU model -Support is not provided for mixed GPU populations - For the latest QVL, please contact your GIGABYTE representative
Internal I/O	◆ 6 x SlimSAS connectors ◆ 1 x M.2 slot ◆ 2 x CPU fan headers ◆ 1 x USB 3.0 header ◆ 1 x TPM header ◆ 7 x PCIe expansion slots ◆ 2 x OCP mezzanine slots ◆ 2 x Power supply connectors ◆ 1 x Front panel header ◆ 1 x Back plane board header ◆ 1 x IPMB connector ◆ 1 x Clear CMOS jumper ◆ 1 x BIOS recovery jumper

Front I/O	◆ 2 x USB 3.0 ◆ 1 x Power button with LED ◆ 1 x ID button with LED ◆ 1 x Reset button ◆ 1 x NMI button ◆ 1 x System status LED ◆ 1 x HDD activity LED ◆ 2 x LAN activity LEDs
Rear I/O	◆ 2 x USB 3.0 ◆ 1 x VGA ◆ 1 x COM (RJ45 type) ◆ 2 x RJ45 ◆ 1 x MLAN ◆ 1 x ID button with LED
Backplane I/O	◆ 9CBP20C4NR-00: 12 x SATA/SAS ports ◆ Bandwidth: SATAIII 6Gb/s or SAS 12Gb/s per port
TPM	◆ 1 x TPM header with LPC interface ◆ Optional TPM2.0 kit: CTM000
System Management	◆ Aspeed® AST2500 management controller ◆ GIGABYTE Management Console (AMI MegaRAC SP-X) web interface: ◆ Dashboard ◆ JAVA Based Serial Over LAN ◆ HTML5 KVM ◆ Sensor Monitor (Voltage, RPM, Temperature, CPU Status …etc.) ◆ Sensor Reading History Data ◆ FRU Information ◆ SEL Log in Linear Storage / Circular Storage Policy ◆ Hardware Inventory ◆ Fan Profile ◆ System Firewall ◆ Power Consumption ◆ Power Control ◆ LDAP / AD / RADIUS Support ◆ Backup & Restore Configuration ◆ Remote BIOS/BMC/CPLD Update ◆ Event Log Filter ◆ User Management ◆ Media Redirection Settings ◆ PAM Order Settings ◆ SSL Settings ◆ SMTP Settings

Power Supply	◆ 2 x 2000W redundant PSUs ◆ 80 PLUS Platinum AC Input: ◆ 100-127V~/ 12.5A, 50-60Hz ◆ 200-240V~/ 12.5A, 50-60Hz DC Output: ◆ Max 1008W/ 100-127V~ ◆ +12V/ 84A ◆ +12Vsb/ 2A ◆ - Max 2004W/ 200-240V ◆ +12V/ 167A ◆ +12Vsb/ 2A
Environment Ambient Temperature Relative Humidity	◆ Operating temperature: 10°C to 35°C ◆ Non-operating temperature: -40°C to 60°C ◆ Operating humidity: 8-80% (non-condensing) ◆ Non-operating humidity: 20%-95% (non-condensing) 1) Ambient temperature limited to 30°C if using 280W CPU 2) NOTE: Please contact Technical Support for more information about optimized GPU system operating temperature
System Dimension	◆ 2U ◆ 438mm (W) x 87mm (H) x 710mm (D)

* We reserves the right to make any changes to the product specifications and product-related information without prior notice.

1-3 System Block Diagram

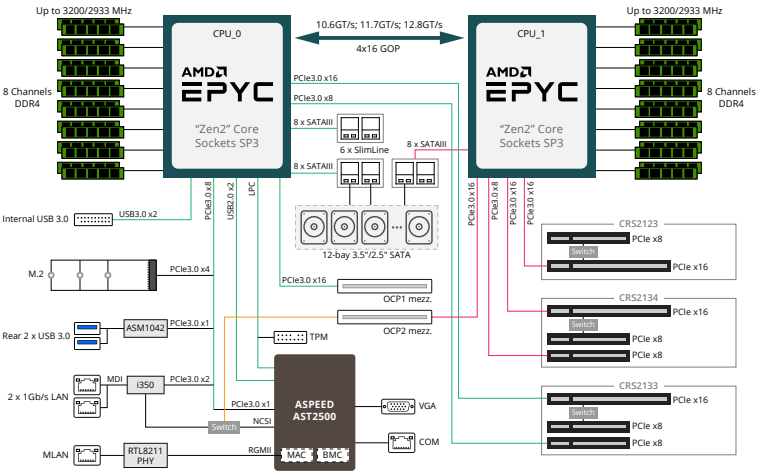

Chapter 2 System Appearance

2-1 Front View

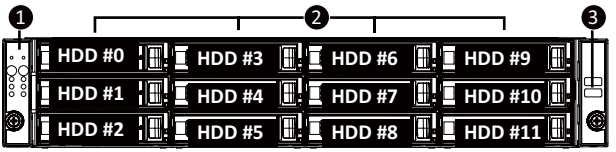

No.	Description
1.	Front Panel LEDs and buttons
2.	HDD Bays
3.	Front USB 3.0 ports

- Refer to Chapter **2-3 Front Panel LED** and Buttons for a detailed description of the function of the LEDs.

2-2 Rear View

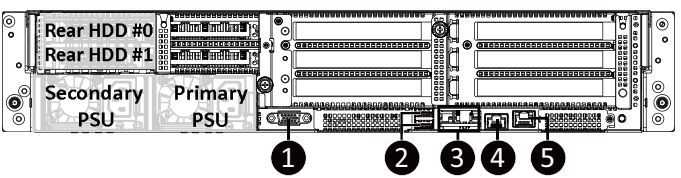

No.	Description
1.	VGA port
2.	USB 3.0 ports
3.	LAN ports
4.	COM port (RJ45 type)
5.	10/100/1000 Server management LAN port

- Refer to Chapter **2-4 Rear System LAN LEDs** for a detailed description of the function of the LEDs.

2-3 Front Panel LED and Buttons

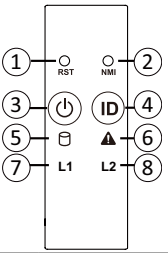

No.	Name	Color	Status	Description
1.	Reset Button	--	--	Press this button to reset the system.
2.	NMI button	--	--	Press this button for the server to generate a NMI to the processor. If multiple-bit ECC errors occur, the server will effectively be halted.
3.	Power button with LED	Green	On	Indicates the system is powered on.
		Green	Blink	System is in ACPI S1 state (sleep mode).
		N/A	Off	• System is not powered on or in ACPI S5 state (power off) • System is in ACPI S4 state (hibernate mode)
4.	ID Button with LED	Blue	On	Indicates the system identification is active.
		N/A	Off	Indicates the system identification is disabled.
5.	HDD Status LED	Green	On	Indicates locating the HDD.
			Blink	Indicates accessing the HDD.
		Amber	On	Indicates HDD error.
		Green/ Amber	Blink	Indicates HDD rebuilding.
		N/A	Off	Indicates no HDD access or no HDD error.
6.	System Status LED	Green	On	Indicates system is operating normally.
		Amber	On	Indicates a critical condition, may include: -System fan failure -System temperature
			Blink	Indicates non-critical condition, may include: -Redundant power module failure -Temperature and voltage issue
		N/A	Off	Indicates system is not ready, may include: -POST error -NMI error -Processor or terminator is missing

7.	LAN1 Active/ Link LED	Green	On	Indicates a link between the system and the network or no access.
		Green	Blink	Indicates data trasmission or receiving is occuring.
		N/A	Off	Indicates no data transmission or receiving is occuring.
8.	LAN2 Active/ Link LED	Green	On	Indicates a link between the system and the network or no access.
		Green	Blink	Indicates data trasmission or receiving is occuring.
		N/A	Off	Indicates no data transmission or receiving is occuring.

2-4 Rear System LAN LEDs

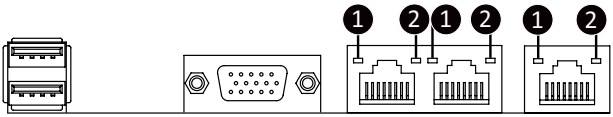

No.	Name	Color	Status	Description
1.	1GbE Speed LED	Yellow	On	1 Gbps data rate
		Green	On	100 Mbps data rate
		N/A	Off	10 Mbps data rate
2.	1GbE Link/ Activity LED	Green	On	Link between system and network or no access
			Blink	Data transmission or receiving is occurring
		N/A	Off	No data transmission or receiving is occurring

2-5 Hard Disk Drive LEDs

3.5"

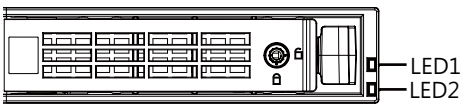

2.5"

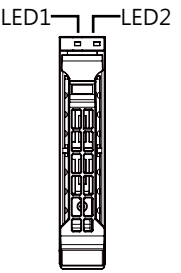

LED 2	HDD Present	No HDD
Green	ON	OFF

RAID SKU	LED1	Locate	HDD Fault	Rebuilding	HDD Access	HDD Present (No Access)
No RAID configuration (via HBA, ICH)	Disk LED (LED on Back Panel)	Green	ON(*1)	OFF	Green	OFF
		Amber	OFF	OFF	Amber	OFF
	Removed HDD Slot (LED on Back Panel)	Green	ON(*1)	OFF	Green	--
		Amber	OFF	OFF	Amber	--
RAID configuration (via HW RAID Card or SW RAID Card)	Disk LED	Green	ON	OFF	Alternately	OFF
		Amber	OFF	ON	(Low Speed: 2 Hz)	OFF
	Removed HDD Slot	Green	ON(*1)	OFF	(*3)	--
		Amber	OFF	ON	(*3)	--

LED 2	HDD Present	No HDD
Green	ON	OFF

NOTE:

*1: Depends on HBA/Utility Spec.

*2: Blink cycle depends on HDD's activity signal.

*3: If HDD is pulled out during rebuilding, the disk status of this HDD is regarded as faulty.

2-6 Power Supply Unit LED

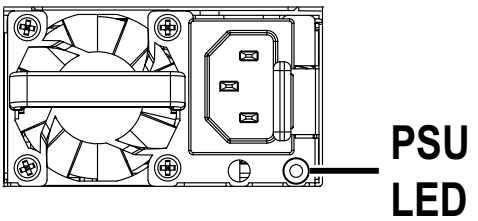

State	Description
Off	No AC power to all power supplies
1Hz Blink Green	AC present/ only standby on/ Cold redundant mode
2Hz Blink Green	Power supply firmware updating mode
Amber	AC cord unplugged or AC power lost; with a second power supply in parallel still with AC input power
	Power supply critical event causing shut down: failure, OCP, OVP, Fan Fail, UVP
1Hz Blink Amber	Power supply warning events where the power supply continues to operate: high temp, high power, high current, slow fan

Chapter 3 System Hardware Installation



Pre-installation Instructions

Computer components and electronic circuit boards can be damaged electrostatic discharge. Working on computers that are still connected to a power supply can be extremely dangerous. Follow the simple guidelines below to avoid damage to your computer or injury to yourself.

- Always disconnect the computer from the power outlet whenever you are working inside the computer case.
- If possible, wear a grounded wrist strap when you are working inside the computer case. Alternatively, discharge any static electricity by touching the bare metal system of the computer case, or the bare metal body of any other grounded appliance.
- Hold electronic circuit boards by the edges only. Do not touch the components on the board unless it is necessary to do so. Do not flex or stress the circuit board.
- Leave all components inside the static-proof packaging until you are ready to use the component for the installation.

3-1 Removing and Installing the Chassis Cover

Before you remove or install the system cover

- Make sure the system is not turned on or connected to AC power.

Follow these instructions to remove the chassis covers:

1. Remove the single screw securing the cover.
2. Loosen the two thumbnail screws securing the top rear cover in place.
3. Push down on the indentations located on the side of the chassis cover.
4. Slide the cover towards the rear and remove the cover in the direction indicated.
5. To reinstall the chassis cover follow steps 1-4 in reverse order.

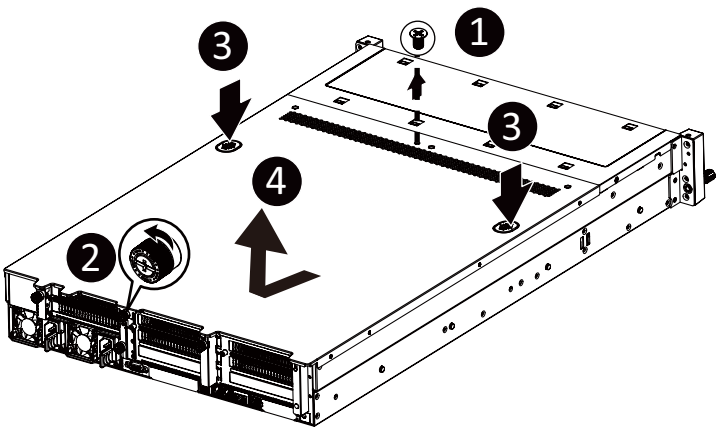

3-2 Removing and Installing the Fan Duct

Follow these instructions to remove the fan duct:

1. Lift up to remove the fan duct.
2. To reinstall the fan duct, align the fan duct with the guiding groove. Push down the fan duct until it is firmly seated on the system.

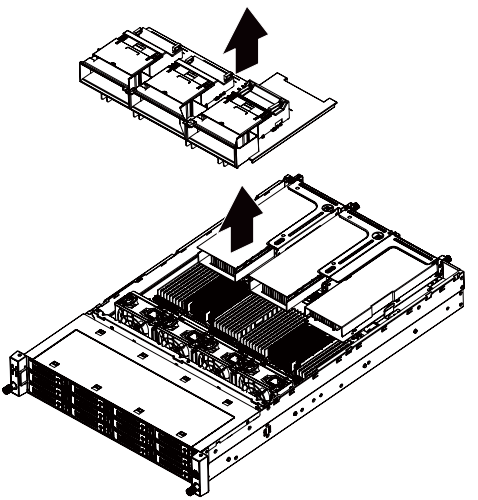

3-3 Removing and Installing the CPU and Heat Sink

Read the following guidelines before you begin to install the CPU:

- •Make sure that the motherboard supports the CPU.
- •Always turn off the computer and unplug the power cord from the power outlet before installing the CPU to prevent hardware damage.
- •Unplug all cables from the power outlets.
- •Disconnect all telecommunication cables from their ports.
- •Place the system unit on a flat and stable surface.
- •Open the system according to the instructions.

WARNING!

Failure to properly turn off the server before you start installing components may cause serious damage. Do not attempt the procedures described in the following sections unless you are a qualified service technician.

Follow these instructions to install the CPU:

1. Loosen the three captive screws in sequential order (1→2→3) securing the CPU cover.
2. Flip open the CPU cover.
3. Remove the CPU cap with CPU from the CPU frame using the handle on the CPU cap.
4. Using the handle on the CPU cap insert the new CPU cap with CPU installed into the CPU frame.
   NOTE: Ensure that the CPU is installed in the CPU cap in the correct orientation, with the gold triangle on the CPU aligned to the top left corner of the CPU cap.
5. Flip the CPU frame with CPU installed into place in the CPU socket.

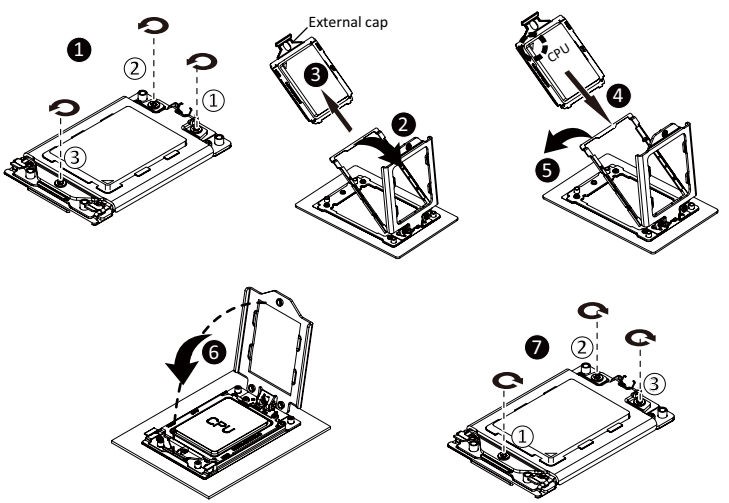

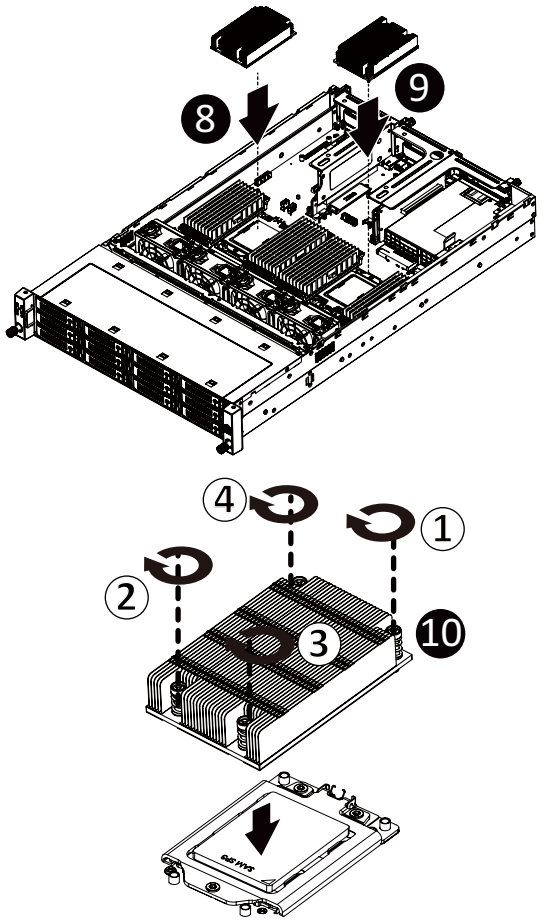

- Tighten the CPU cover screws in sequential order (1 → 2 → 3).
- The screw tightening torque: 16.1 ± 1.2 kgf-cm

3-4 Removing and Installing Memory

Read the following guidelines before you begin to install the memory:

- Make sure that the motherboard supports the memory. It is recommended that memory of the same capacity, brand, speed, and chips be used.
- Always turn off the computer and unplug the power cord from the power outlet before installing the memory to prevent hardware damage.
- Memory modules have a foolproof design. A memory module can be installed in only one direction. If you are unable to insert the memory, switch the direction.

3-4-1 Eight-Channel Memory Configuration

This motherboard provides 32 DDR4 memory sockets and supports Eight Channel Technology. After the memory is installed, the BIOS will automatically detect the specifications and capacity of the memory.

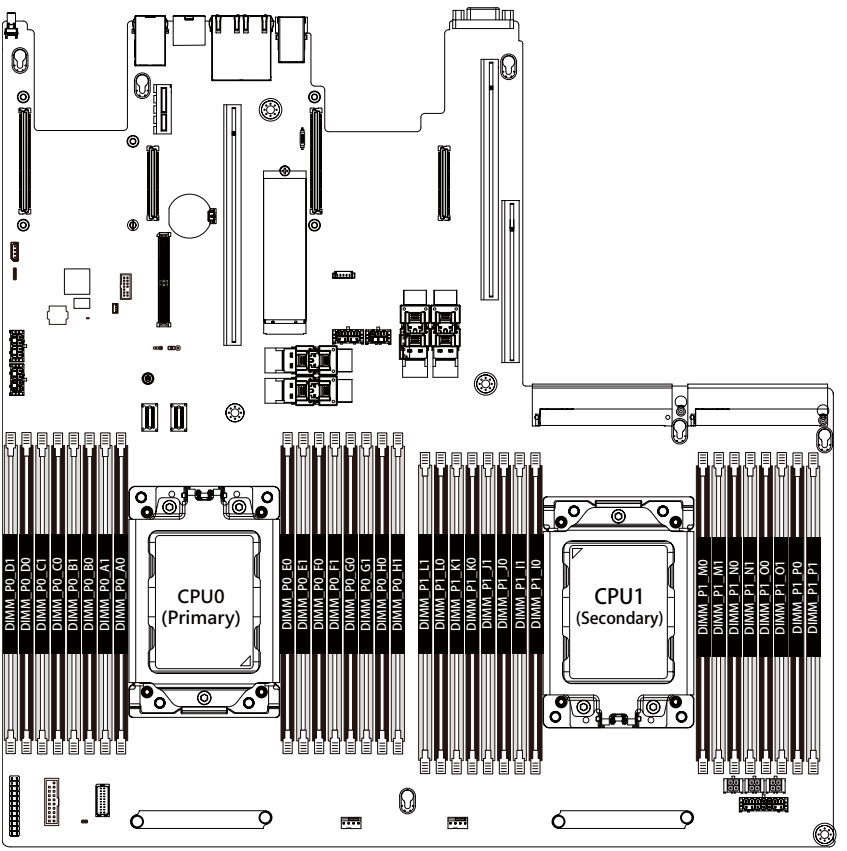

3-4-2 Removing and Installing a Memory Module

Before installing a memory module, make sure to turn off the computer and unplug the power cord from the power outlet to prevent damage to the memory module.
Be sure to install DDR4 DIMMs on to this motherboard.

Follow these instructions to install a DIMM module:

1. Insert the DIMM memory module vertically into the DIMM slot and push it down.
2. Close the plastic clip at both edges of the DIMM slots to lock the DIMM module.
3. Reverse the installation steps when you want to remove the DIMM module.

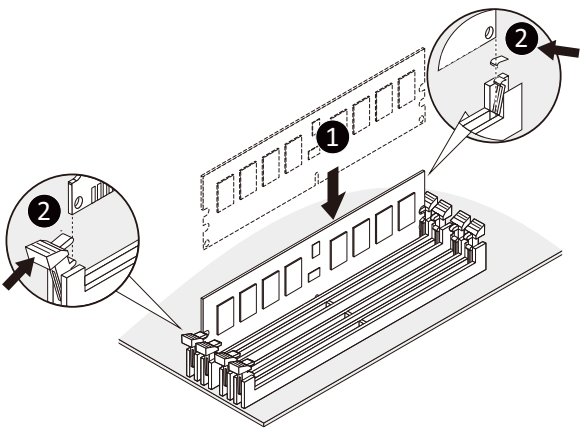

3-4-3 Processor and Memory Module Matrix Table

Processor and Memory Module Matrix Table																
CPU#	Channel A/I		Channel B/J		Channel C/K		Channel D/L		Channel E/M		Channel F/N		Channel G/O		Channel H/P	
8 DIMMs																
CPU0		A1		B1		C1		D1		E1		F1		G1		H1
16 DIMMs																
CPU0	A0	A1	B0	B1	C0	C1	D0	D1	E0	E1	F0	F1	G0	G1	H0	H1
16 DIMMs																
CPU0		A1		B1		C1		D1		E1		F1		G1		H1
CPU1		I1		J1		K1		L1		M1		N1		O1		P1
32 DIMMs																
CPU0	A0	A1	B0	B1	C0	C1	D0	D1	E0	E1	F0	F1	G0	G1	H0	H1
CPU1	I0	I1	J0	J1	K0	K1	L0	L1	M0	M1	N0	N1	O0	O1	P0	P1

3-4-4 DIMM Population Table

EPYC Memory Speed based on DIMM Population (One DIMM per Channel)

DIMM Type	DIMM Population	Max EPYC 7003 DDR Frequency (MHz)
	DIMM 0	
RDIMM	1R (1 Rank)	3200
	2R or 2DR (2 Ranks)	3200
LRDIMM	4DR (4 Ranks)	3200
	2S2R (4 Ranks)	3200
	2S4R (8 Ranks)	3200
3DS	2S2R (4 Ranks)	3200
	2S4R (8 Ranks)	3200

EPYC Memory Speed based on DIMM Population (Two DIMM per Channel)

DIMM Type	DIMM Population		Max EPYC 7003 DDR Frequency (MHz)
	DIMM 0	DIMM 1	
RDIMM	--	1R	3200
	1R	1R	2933
	--	2R or 2DR	3200
	1R	2R or 2DR	2933
	2R or 2DR	2R or 2DR	2933
LRDIMM	--	4DR	3200
	4DR	4DR	2933
	--	2S2R (4 Ranks)	3200
	--	2S4R (8 Ranks)	3200
	2S2R (4 Ranks)	2S2R (4 Ranks)	2933
	2S4R (8 Ranks)	2S4R (8 Ranks)	2933
3DS	--	2S2R (4 Ranks)	2933
	2S2R (4 Ranks)	2S2R (4 Ranks)	2666
	--	2S4R (8 Ranks)	2933
	2S4R (8 Ranks)	2S4R (8 Ranks)	2666

NOTE!

l 1R: 1 package rank of SDP DRAMs

l 2R: 2 package rank of SDP DRAMs

l 2DR: 2 package rank of DDP DRAMs

l 4DR: 2 package rank of DDP DRAMs

l 1S2R/1S4R/1S8R: 1 package rank of 2/4/8 high 3DS DRAMs

l 2S2R/2S4R/2S8R: 2 package rank of 2/4/8 high 3DS DRAMs

l DIMM must be populated in sequential alphabetic order, starting with bank A.

l When only one DIMM is used, it must be populated in memory slot A1.

3-5 Removing and Installing the PCI Expansion Card

- Voltages can be present within the server whenever an AC power source is connected. This voltage is present even when the main power switch is in the off position. Ensure that the system is powered off and all power sources have been disconnected from the server prior to installing a PCIe card.
- Failure to observe these warnings could result in personal injury or damage to equipment.

- The PCI riser assembly does not include a riser card or any cabling as standard. To install a PCIe card, a riser card must be installed.

Follow these instructions to PCI Expansion card:

1. Loosen and remove the thumbscrew on the riser bracket.
2. Remove the screw securing the riser bracket.
3. Lift up the riser bracket out of system.
4. Loosen and remove the screw securing the slot cover from riser bracket.
5. Orient the PCIe card with the riser guide slot and push in the direction of the arrow until the PCIe card sits in the PCIe card connector.

NOTE: Some riser brackets allow for single or multiple PCIe cards. Repeat steps 4-5 as necessary.

6. Secure the PCIe card with the screw.
7. Reverse steps 1-3 to install the riser bracket.

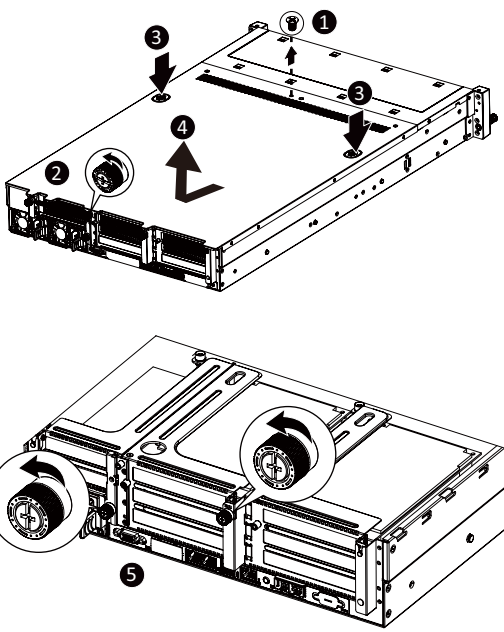

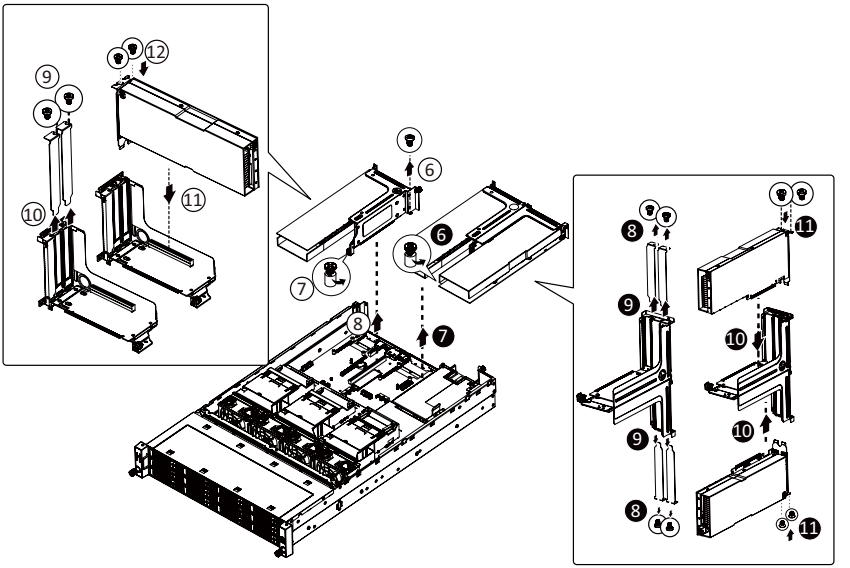
9
12
10
11
6
7
8
8
11
9
10
9
10
8
11

3-6 Removing and Installing the Hard Disk Drive

Read the following guidelines before you begin to install the hard disk drive:

- Take note of the drive tray orientation before sliding it out.
- The tray will not fit back into the bay if it is inserted incorrectly.
- Make sure that the HDD is connected to the HDD connector on the backplane.

Follow these instructions to install a 3.5" hard disk drive:

1. Press the release button.
2. Extend the locking lever and pull the locking lever to remove the HDD tray.
3. Place the hard disk drive into the HDD tray.
4. Secure the hard disk drive to the HDD tray with four screws.

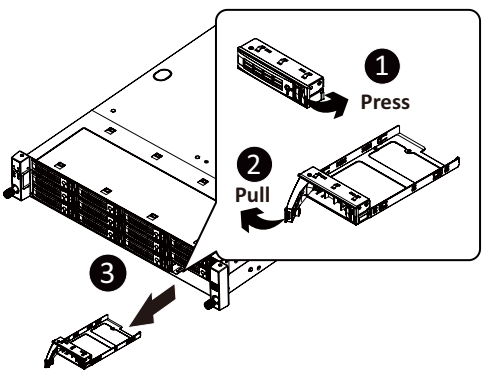

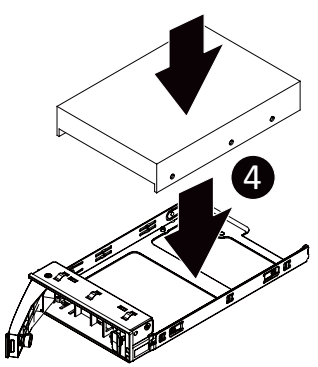

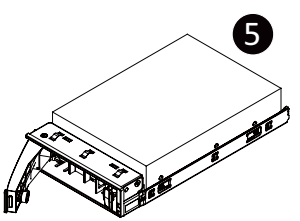

Follow these instructions to install a 2.5" hard disk drive:

1. Press the release button.
2. Extend the locking lever.
3. Pull the locking lever in the direction indicated to remove the HDD tray.
4. Align the hard disk drive with the positioning screw on the HDD tray.
5. Secure the hard disk drive with five screws.
6. Reinsert the HDD tray into the slot and close the locking lever.

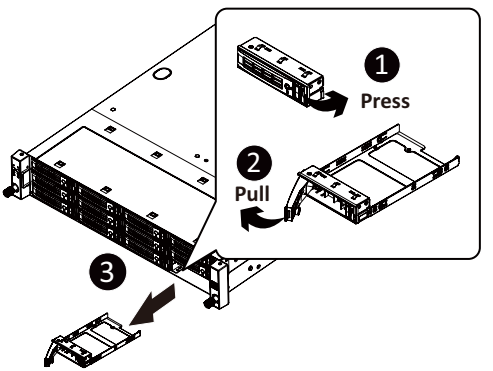

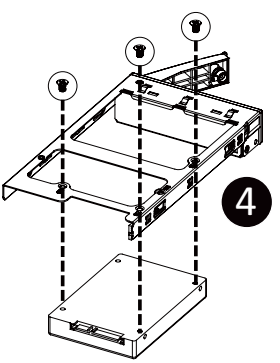

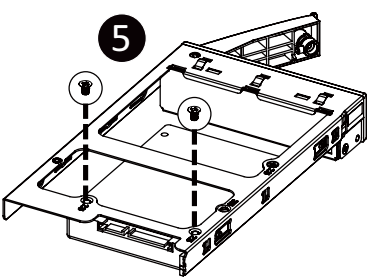

3-7 Installing and Removing an M.2 Solid State Drive

Follow these instructions to install an optional M.2 solid state drive (SSD):

1. Place the solid state drive into the M.2 connector.
2. Secure the solid state drive to the motherboard with a single screw.
   NOTE: The position of the screw will depend on the size of the SSD. Refer to the second image below for proper placement.
3. Reverse steps 1-2 to remove the solid state drive.

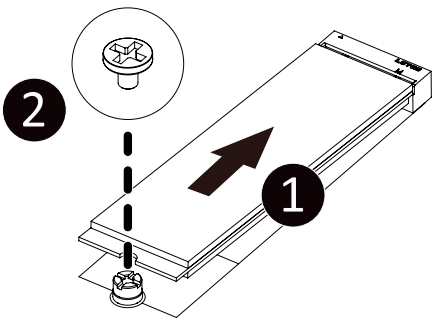

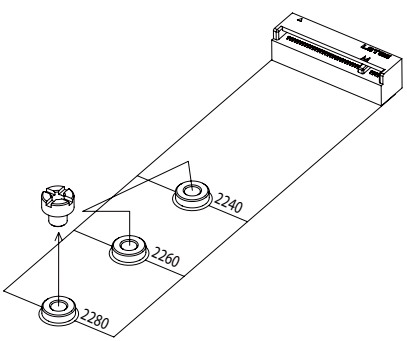

3-8 Replacing the Fan Assembly

Follow these instructions to replace a fan assembly:

1. Flip the latches on the top of the fan outwards.
2. Using the latches, lift up the fan assembly from the chassis.
3. Reverse the previous steps to install the replacement fan assembly.

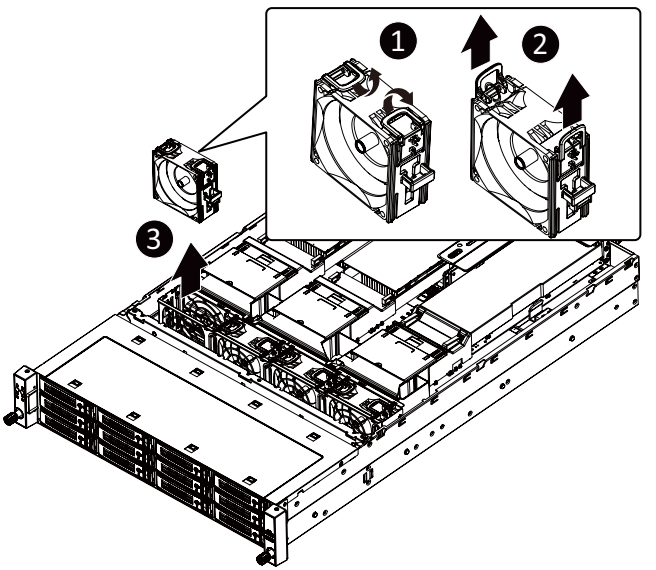

3-9 Removing and Installing the Power Supply

Before you remove or install the power supply unit:

- Make sure the system is not turned on or connected to AC power.

Follow these instructions to replace the power supply:

1. Press the retaining clip on the left side of the power supply unit along the direction of the arrow.
2. Pull the power supply handle at the same time and pull out the power supply unit.
3. Insert the replacement power supply unit firmly into the chassis. Connect the AC power cord to the replacement power supply.
4. Repeat steps 1-3 for replacement of the second power supply.

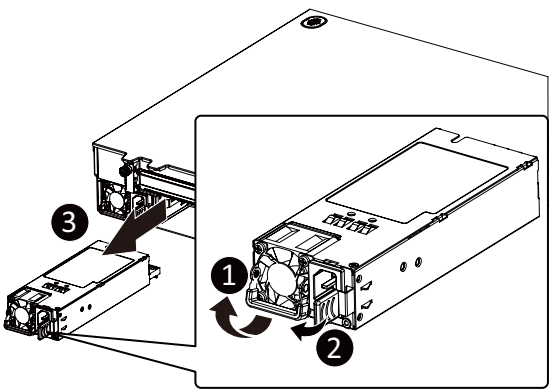

3-10 Cable Routing

Front Panel Board Cable

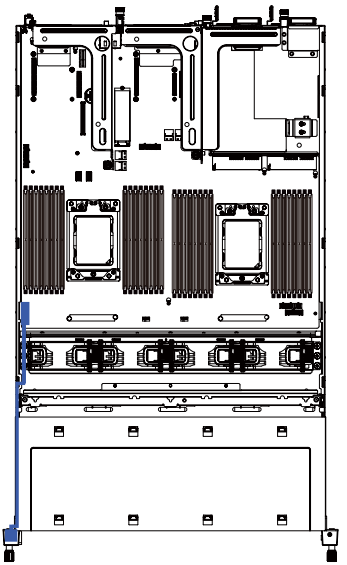

Front Panel USB 3.0 Cable

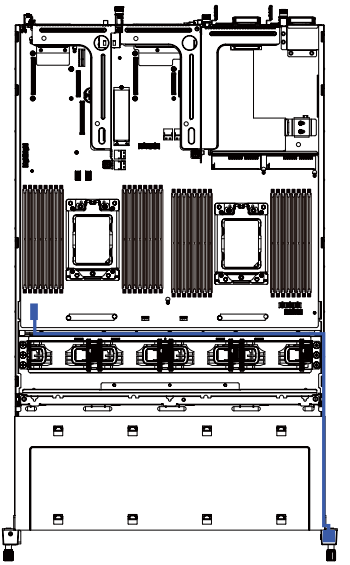

HDD Back Panel Board Power Cable

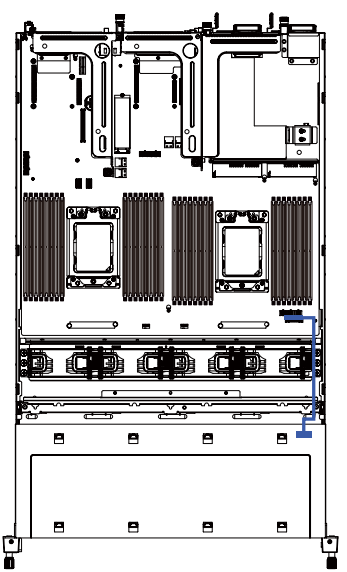

HDD Back Panel Board Signal Cable

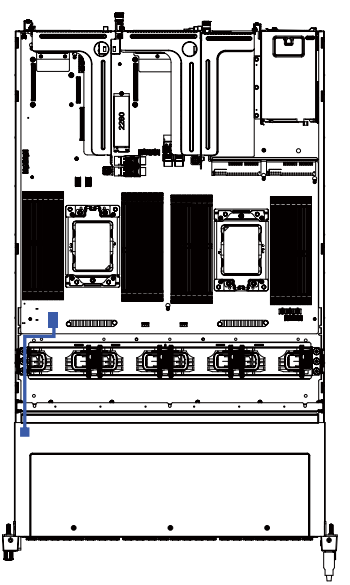

On board SATA to HDD Back Plane Board Cable (HDD#8~#11)

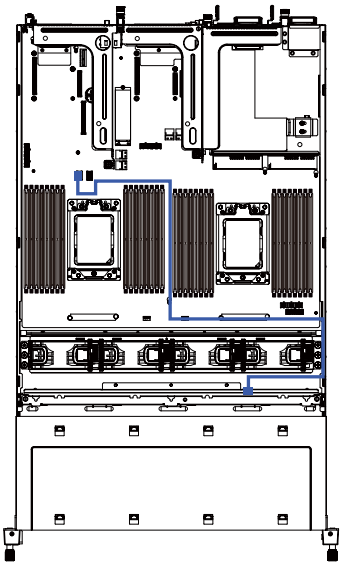

Mini-SAS HD RAID Card Cable

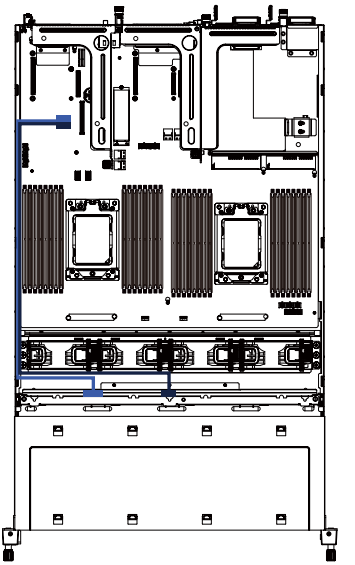

GPU Card Cable

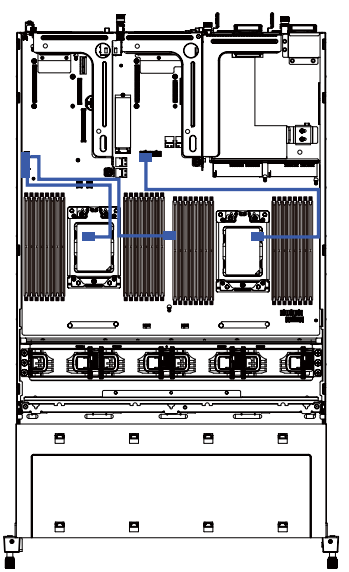

System Fan Cable

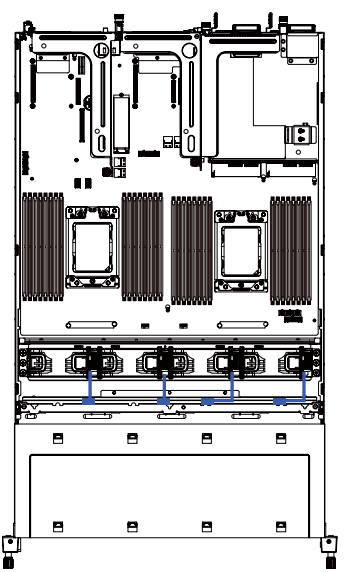

Chapter 4 Motherboard Components

4-1 Motherboard Components

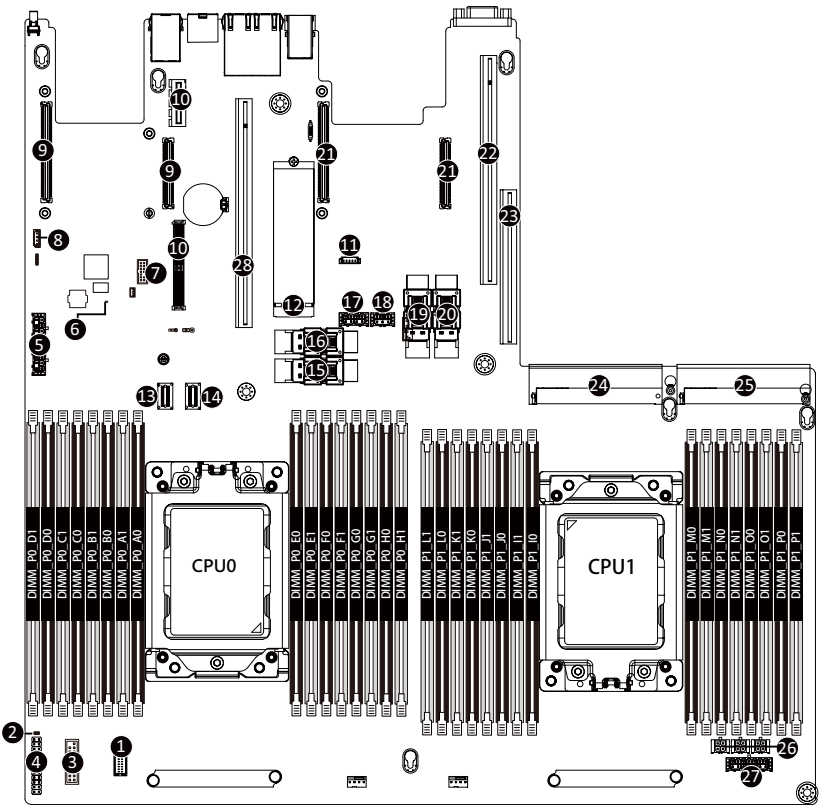

Item	Description
1	HDD Back Plane Board Connector
2	Case Open Intrusion Header
3	Front Panel USB 3.0 Connector
4	Front Panel Connector
5	2 x 4 Pi n GPGPU Power Connectors
6	BMC Firmware Readiness LED
7	TPM Modue Connector
8	IPMB Connector
9	OCP Mezzanine Connector#1
10	Riser Slot Connector #1
11	SGPIO Connector
12	M.2 Slot (PCIe Gen3 x4, Support NGFF-2280, M-Key)

13	SlimLine Connector #0 (PCIe/SATA/Configurable and define SKUs)
14	SlimLine Connector #1 (PCIe/SATA/Configurable and define SKUs)
15	SlimLine Connector #3 (PCIe/SATA/Configurable and define SKUs)
16	SlimLine Connector #2 (PCIe/SATA/Configurable and define SKUs)
17	2 x 4 Pin GPGPU Power Connector
18	2 x 3 Pin Rear Back Plane Board Power Connector
19	SlimLine Connector #4 (PCIe/SATA/Configurable and define SKUs)
20	SlimLine Connector #5 (PCIe/SATA/Configurable and define SKUs)
21	OCP Mezzanine Connector#2 (Support NCSI)
22	Riser Slot Connector #3
23	Riser Slot Connector #4 for Proprietary NVMe Small Card (R181-Z91/R181-Z92 Only)
24	Power Supply Connector#1 (Primary)
25	Power Supply Connector#2 (Secondary)
26	2 x 2 Pin Extention Card Power Connectors
27	2 x 7 Pin HDD Back Plane Board Power Connector
28	Riser Slot Connector #2

4-2 Jumper Settings

J1

J1		ON	OFF
1	HOST_SMBUS_SEL	BIOS defined	
2	PMBUS_SEL	BIOS defined	
3	BIOS_PWD	Clear supervisor password	Normal [Default]
4	DB_PLD	CPLD debug mode	Normal [Default]

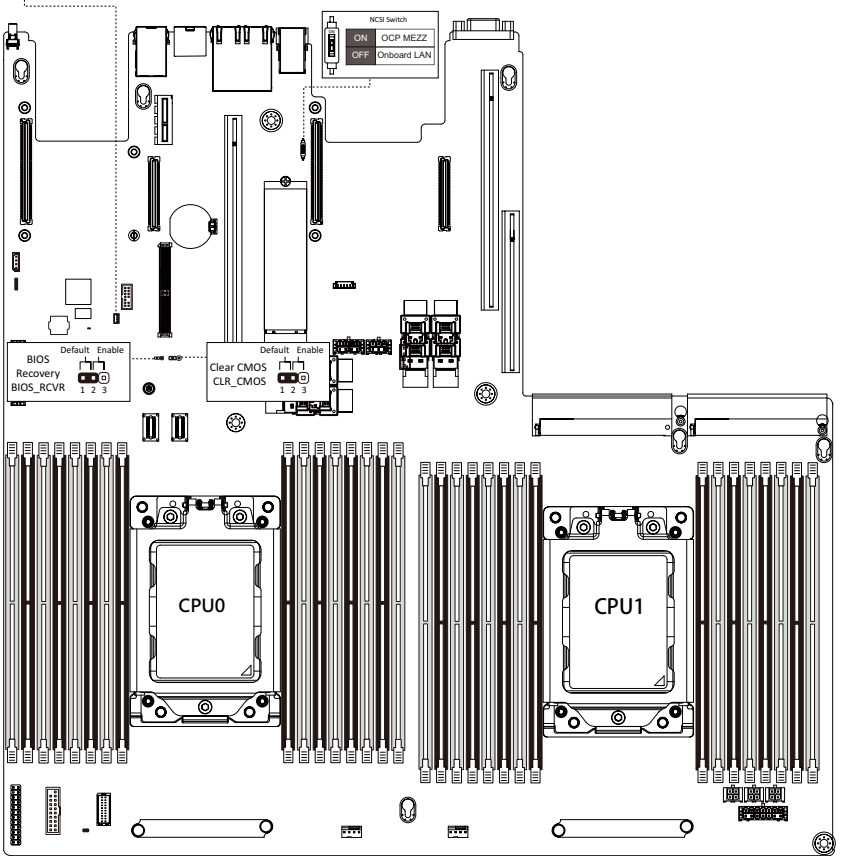

4-3 Thermal Mapping Table

1 MB_TEMP1	8 DIMMG3_TEMP	15 NVMeG5_TEMP
2 MB_TEMP2	9 INLET_AIR_TEMP	
3 CPU0_TEMP	10 NVMeG0_TEMP	
4 CPU1_TEMP	11 NVMeG1_TEMP	
5 DIMMG0_TEMP	12 NVMeG2_TEMP	
6 DIMMG1_TEMP	13 NVMeG3_TEMP	
7 DIMMG2_TEMP	14 NVMeG4_TEMP	

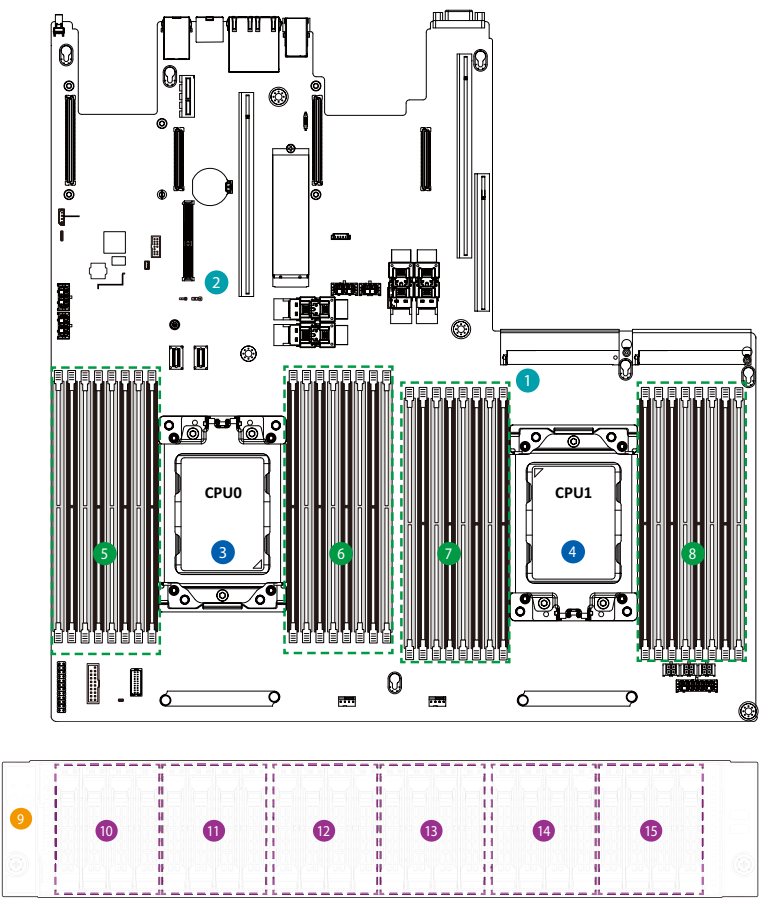

Chapter 5 BIOS Setup

BIOS (Basic Input and Output System) records hardware parameters of the system in the EFI on the motherboard. Its major functions include conducting the Power-On Self-Test (POST) during system startup, saving system parameters and loading operating system, etc. BIOS includes a BIOS Setup program that allows the user to modify basic system configuration settings or to activate certain system features. When the power is turned off, the battery on the motherboard supplies the necessary power to the CMOS to keep the configuration values in the CMOS.

To access the BIOS Setup program, press the <DEL> key during the POST when the power is turned on.



- BIOS flashing is potentially risky, if you do not encounter problems of using the current BIOS version, it is recommended that you don't flash the BIOS. To flash the BIOS, do it with caution. Inadequate BIOS flashing may result in system malfunction.
- It is recommended that you not alter the default settings (unless you need to) to prevent system instability or other unexpected results. Inadequately altering the settings may result in system's failure to boot. If this occurs, try to clear the CMOS values and reset the board to default values. (Refer to the **Exit** section in this chapter or introductions of the battery/clearing CMOS jumper in Chapter 4 for how to clear the CMOS values.)

BIOS Setup Program Function Keys

<←><→>	Move the selection bar to select the screen
<↑><↓>	Move the selection bar to select an item
<+>	Increase the numeric value or make changes
<->	Decrease the numeric value or make changes
<Enter>	Execute command or enter the submenu
<Esc>	Main Menu: Exit the BIOS Setup program Submenus: Exit current submenu
<F1>	Show descriptions of general help
<F3>	Restore the previous BIOS settings for the current submenus
<F9>	Load the Optimized BIOS default settings for the current submenus
<F10>	Save all the changes and exit the BIOS Setup program

- **Main**
  This setup page includes all the items in standard compatible BIOS.
- **Advanced**
  This setup page includes all the items of AMI BIOS special enhanced features.
  (ex: Auto detect fan and temperature status, automatically configure hard disk parameters.)
- **AMD CBS**
  This setup page includes the common items for configuration of AMD motherboard-related information.
- **AMD PBS Option**
  This setup page includes the common items for configuration of AMD CPM RAS related settings.
- **Chipset**
  This setup page includes all the submenu options for configuring the function of processor, network, North Bridge, South Bridge, and System event logs.
- **Server Management**
  Server additional features enabled/disabled setup menus.
- **Security**
  Change, set, or disable supervisor and user password. Configuration supervisor password allows you to restrict access to the system and BIOS Setup.
  A supervisor password allows you to make changes in BIOS Setup.
  A user password only allows you to view the BIOS settings but not to make changes.
- **Boot**
  This setup page provides items for configuration of boot sequence.
- **Save & Exit**
  Save all the changes made in the BIOS Setup program to the CMOS and exit BIOS Setup. (Pressing <F10> can also carry out this task.)
  Abandon all changes and the previous settings remain in effect. Pressing <Y> to the confirmation message will exit BIOS Setup. (Pressing <Esc> can also carry out this task.)

5-1 The Main Menu

Once you enter the BIOS Setup program, the Main Menu (as shown below) appears on the screen. Use arrow keys to move among the items and press <Enter> to accept or enter other sub-menu.

Main Menu Help

The on-screen description of a highlighted setup option is displayed on the bottom line of the Main Menu.

Submenu Help

While in a submenu, press <F1> to display a help screen (General Help) of function keys available for the menu. Press <Esc> to exit the help screen. Help for each item is in the Item Help block on the right side of the submenu.

- When the system is not stable as usual, select the **Restore Defaults** item to set your system to its defaults.
- The BIOS Setup menus described in this chapter are for reference only and may differ by BIOS version.

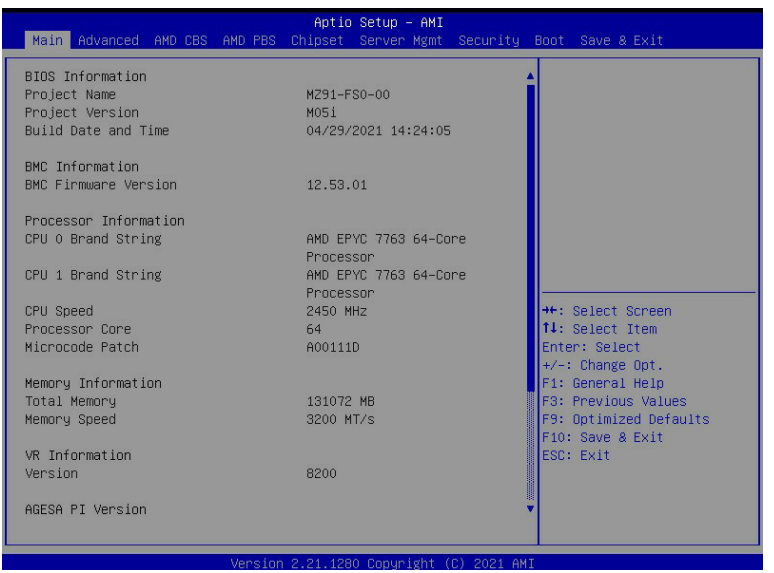

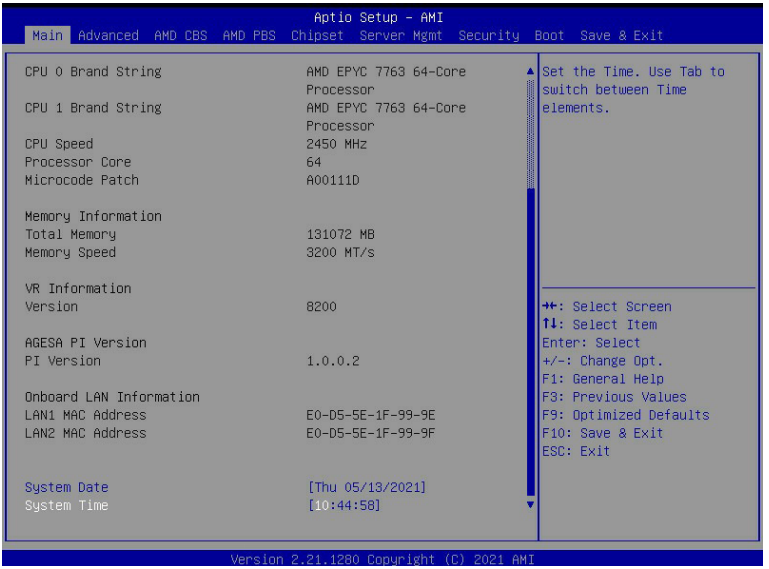

Parameter	Description
BIOS Information	
Project Name	Displays the project name information.
Project Version	Displays version number of the BIOS setup utility.
Build Date and Time	Displays the date and time when the BIOS setup utility was created.
BMC Information	
BMC Firmware Version	Displays version number of the BIOS setup utility.
BIOS Information	
Project Name	Displays the project name information.
Project Version	Displays version number of the BIOS setup utility.
Build Date and Time	Displays the date and time when the BIOS setup utility was created.
BMC Information	
BMC Firmware Version	Displays version number of the BIOS setup utility.
Processor Information	
CPU 0 Brand String / CPU 1 Brand String / CPU Speed / Processor Core / Microcode Patch	Displays the technical information for the installed processor(s).

Parameter	Description
Total Memory(Note1)	Displays the total memory size of the installed memory.
Memory Speed(Note1)	Displays the frequency information of the installed memory.
VR Information	
Version	Displays VR version information.
AGESA PI Version	
PI Version	Displays AGESA PI version information.
Onboard LAN Information	
LAN1 MAC Address(Note2)	Displays LAN MAC address information.
LAN2 MAC Address(Note2)	Displays LAN MAC address information.
System Date	Sets the date following the weekday-month-day-year format.
System Time	Sets the system time following the hour-minute-second format.

(Note1) The number of LAN ports listed will depend on the motherboard / system model.

(Note2) This section will display capacity and frequency information of the memory that the customer has installed.

5-2 Advanced Menu

The Advanced menu display submenu options for configuring the function of various hardware components. Select a submenu item, then press [Enter] to access the related submenu screen.

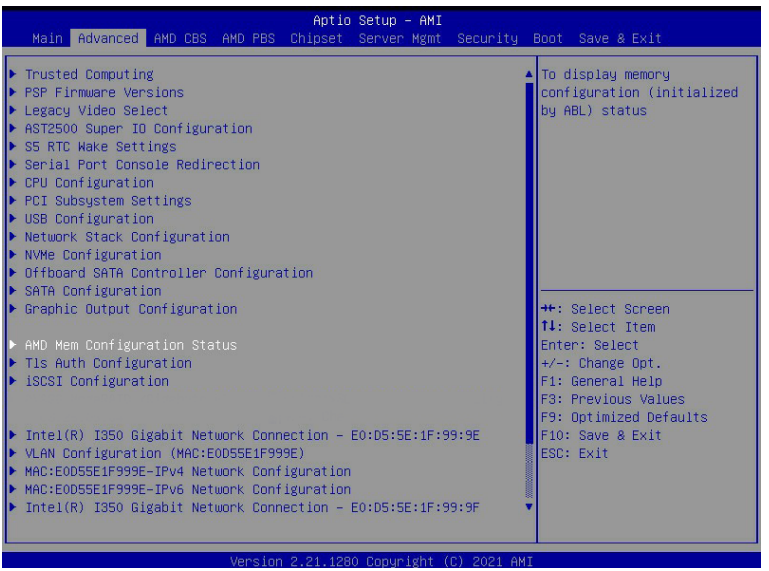

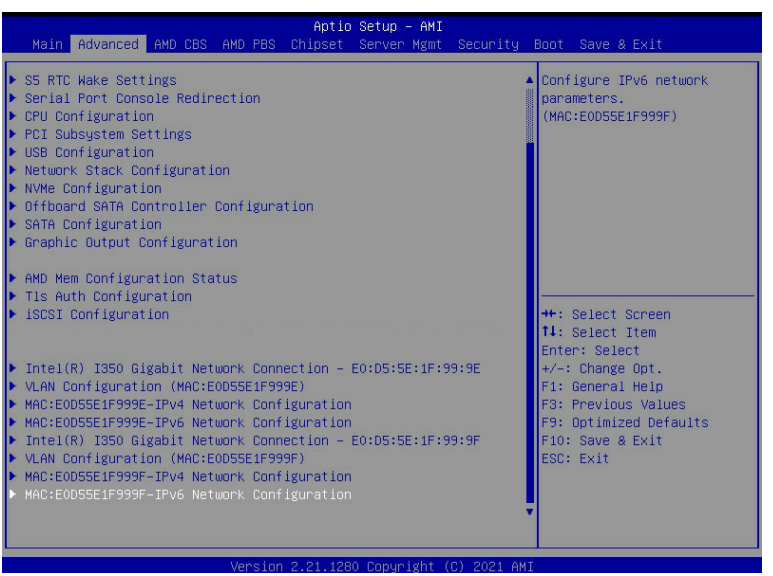

5-2-1 Trusted Computing

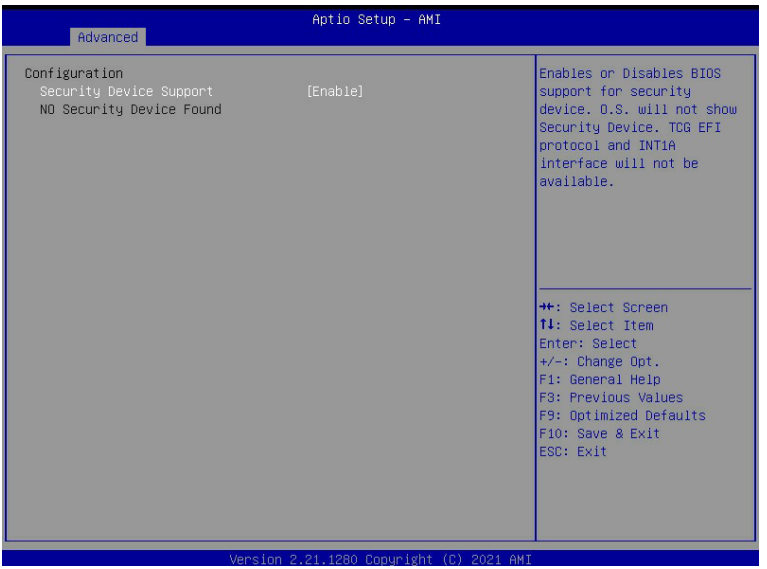

Parameter	Description
Configuration	
Security Device Support	Select Enable to activate TPM support feature. Options available: Enable/Disable. Default setting is **Enable**.
SPI TPM Support	Options available: Enabled/Disabled. Default setting is **Enabled**

5-2-2 PSP Firmware Versions

The PSP Firmware Versions page displays the basic PSP firmware version information. Items on this window are non-configurable.

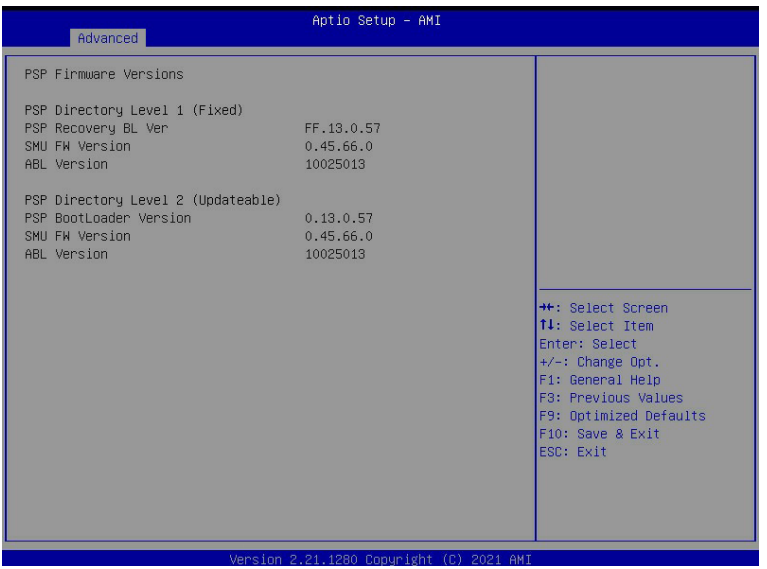

5-2-3 Legacy Video Select

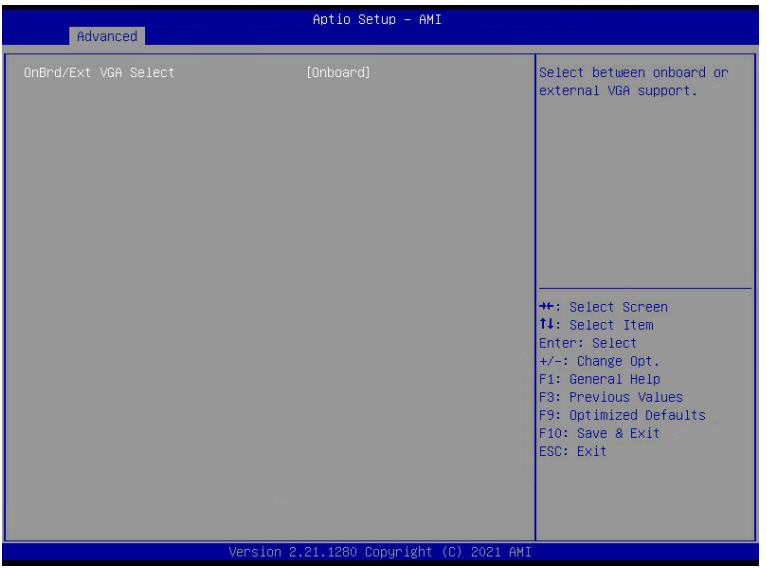

Parameter	Description
OnBrd/Ext VGA Select	Select between onboard or external VGA support. Options available: Auto/Onboard/External. Default setting is **Onboard**.

5-2-4 AST2500 Super IO Configuration

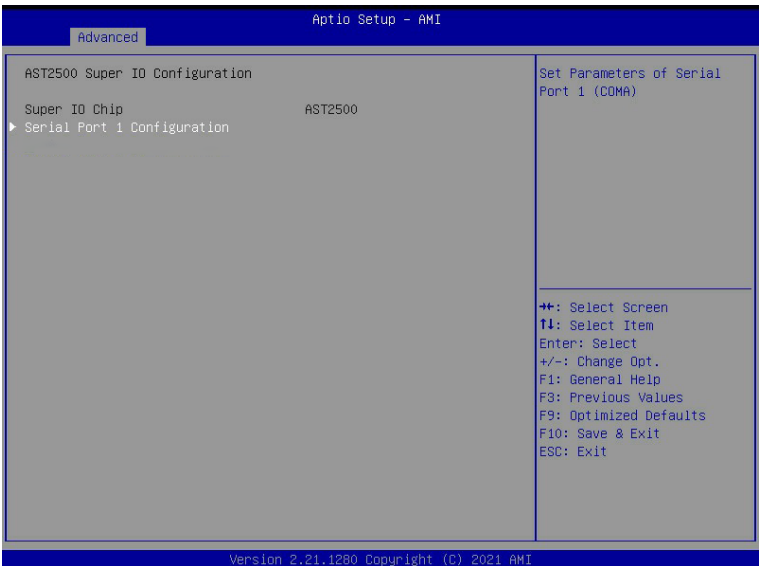

Parameter	Description
AST2500 Super IO Configuration	
Super IO Chip	Displays the super IO chip information.

Parameter	Description
Serial Port 1/2 Configuration	Press [Enter] to configure advanced items. ◆ Serial Port(Note1): – Enable/Disable the Serial Port (COM). When set to Enabled allows you to configure the Serial port 1/2 settings. When set to Disabled, displays no configuration for the serial port. – Options available: Enabled/Disabled. Default setting is **Enabled**. ◆ Devices Settings(Note2): – Displays the serial port 1/2 device settings. ◆ Change Settings(Note2): – Select an optimal setting for the Super I/O device: – Options available for Serial Port 1: Auto IO=3F8h; IRQ=4; IO=3F8h; IRQ=3, 4, 5, 6, 7, 9, 10, 11, 12; IO=2F8h; IRQ=3, 4, 5, 6, 7, 9, 10, 11, 12; IO=3E8h; IRQ=3, 4, 5, 6, 7, 9, 10, 11, 12; IO=2E8h; IRQ=3, 4, 5, 6, 7, 9, 10, 11, 12; Default setting is **Auto**. Options available for Serial Port 2: Auto IO=2F8h; IRQ=3; IO=3F8h; IRQ=3, 4, 5, 6, 7, 9, 10, 11, 12; IO=2F8h; IRQ=3, 4, 5, 6, 7, 9, 10, 11, 12; IO=3E8h; IRQ=3, 4, 5, 6, 7, 9, 10, 11, 12; IO=2E8h; IRQ=3, 4, 5, 6, 7, 9, 10, 11, 12; Default setting is **Auto**. (Note1) Advanced items will appear when this item is set to **Enabled**. (Note2) This item will appear when **Serial Port** is set to **Enabled**.

5-2-5 S5 RTC Wake Settings

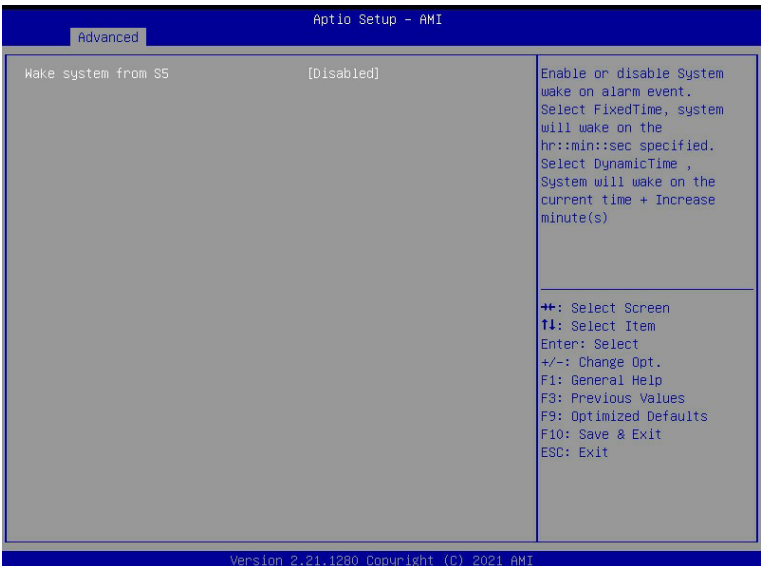

Parameter	Description
Wake system from S5	Enable or disable system wake on alarm event. Select Fixed Time, system will wake on the time (HH:MM:SS) specified. Select Dynamic Time and the system will wake at the current time plus an increase in minute(s). Options available: Disabled/Fixed Time. Default setting is **Disabled**.

5-2-6 Serial Port Console Redirection

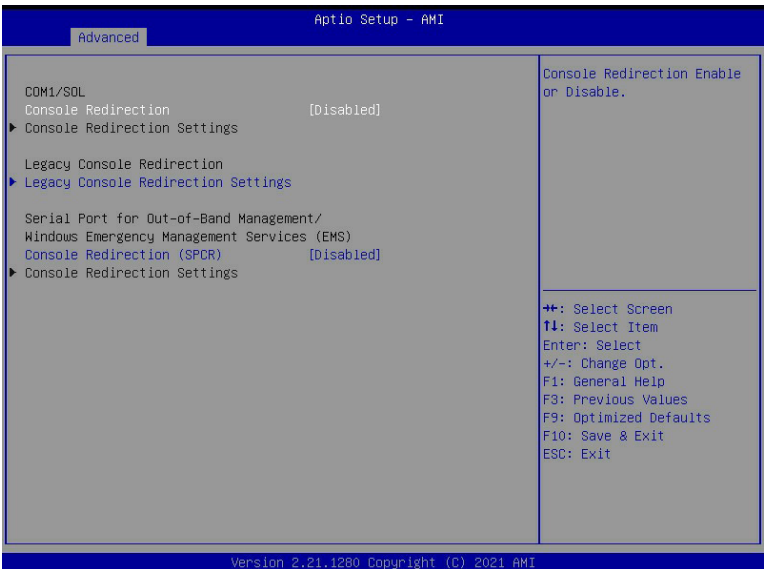

Parameter	Description
COM1/SOL / COM2 Console Redirection(Note)	Select whether to enable console redirection for specified device. Console redirection enables the users to manage the system from a remote location. Options available: Enabled/Disabled. Default setting is **Disabled**.
Legacy Console Redirection	Selects a COM port for Legacy serial redirection. The options are dependent on the available COM ports.
Serial Port for Out-of-Band Management / Windows Emergency Management Services (EMS) Console Redirection(Note)	Selects a COM port for EMS console redirection. EMS console redirection allows the user to configure Console Redirection Settings to support Out-of-Band Serial Port management. Options available: Enabled/Disabled. Default setting is **Disabled**.
COM1/SOL / COM2 Console Redirection Settings	Press [Enter] to configure advanced items. **Please note that this item is configurable when COM1/SOL / COM2 Console Redirection is set to Enabled.** ◆ Terminal Type – Selects a terminal type to be used for console redirection. – Options available: VT100/VT100+/ANSI /VT-UTF8. Default setting is **ANSI**.

(Note) Advanced items prompt when this item is set to Enabled.

Parameter	Description
COM1/SOL / COM2 Console Redirection Settings (continued)	◆ Bits per second – Selects the transfer rate for console redirection. – Options available: 9600/19200/38400/57600/115200. Default setting is **115200**. ◆ Data Bits – Selects the number of data bits used for console redirection. – Options available: 7/8. Default setting is **8**. ◆ Parity – A parity bit can be sent with the data bits to detect some transmission errors. – Even: parity bit is 0 if the num of 1's in the data bits is even. – Odd: parity bit is 0 if num of 1's in the data bits is odd. – Mark: parity bit is always 1. Space: Parity bit is always 0. – Mark and Space Parity do not allow for error detection. – Options available: None/Even/Odd/Mark/Space. Default setting is **None**. ◆ Stop Bits – Stop bits indicate the end of a serial data packet. (A start bit indicates the beginning). The standard setting is 1 stop bit. Communication with slow devices may require more than 1 stop bit. – Options available: 1/2. Default setting is **1**. ◆ Flow Control – Flow control can prevent data loss from buffer overflow. When sending data, if the receiving buffers are full, a 'stop' signal can be sent to stop the data flow. Once the buffers are empty, a 'start' signal can be sent to re-start the flow. Hardware flow control uses two wires to send start/stop signals. – Options available: None/Hardware RTS/CTS. Default setting is **None**. ◆ VT-UTF8 Combo Key Support – Enable/Disable the VT-UTF8 Combo Key Support. – Options available: Enabled/Disabled. Default setting is **Enabled**. ◆ Recorder Mode(Note) – When this mode enabled, only texts will be send. This is to capture Terminal data. – Options available: Enabled/Disabled. Default setting is **Disabled**. ◆ Resolution 100x31(Note) – Enable/Disable extended terminal resolution. – Options available: Enabled/Disabled. Default setting is **Enabled**. ◆ Putty KeyPad(Note) – Selects FunctionKey and KeyPad on Putty. – Options available: T100/LINUX/XTERMR6/SCO/ESCN/VT400. – Default setting is VT100.

(Note) Advanced items prompt when this item is defined.

Parameter	Description
Legacy Console Redirection Settings	◆ Redirection COM Port – Selects a COM port to display redirection of Legacy OS and Legacy OPROM Messages. – Options available: COM1/SOL / COM2. Default setting is **COM1/ SOL**. ◆ Resolution – On Legacy OS, the number of rows and columns supported in redirection. ◆ Options available: 80x24/80x25. Default setting is **80x24**. ◆ Redirection After BIOS POST – This item allows user to enable console redirection after OS has loaded. – Options available: Always Enable/Boot Loader. Default setting is **Always Enable**.
Serial Port for Out-of-Band Management / Windows Emergency Management Services (EMS) Console Redirection Settings	◆ Out-of-Band Mgmt Port – Selects a serial port to remotely manage a Windows server OS. – Options available: COM1/SOL / COM2. Default setting is **COM1/ SOL**. ◆ Terminal Type – Selects a terminal type to be used for console redirection. – Options available: VT100/VT100+/ANSI /VT-UTF8. Default setting is **VT-UTF8**. ◆ Bits per second – Selects the transfer rate for console redirection. – Options available: 9600/19200/38400/57600/115200. Default setting is **115200**. ◆ Flow Control – Flow control can prevent data loss from buffer overflow. When sending data, if the receiving buffers are full, a 'stop' signal can be sent to stop the data flow. Once the buffers are empty, a 'start' signal can be sent to re-start the flow. Hardware flow control uses two wires to send start/stop signals. – Options available: None/Hardware RTS/CTS. Default setting is **None**.

5-2-7 CPU Configuration

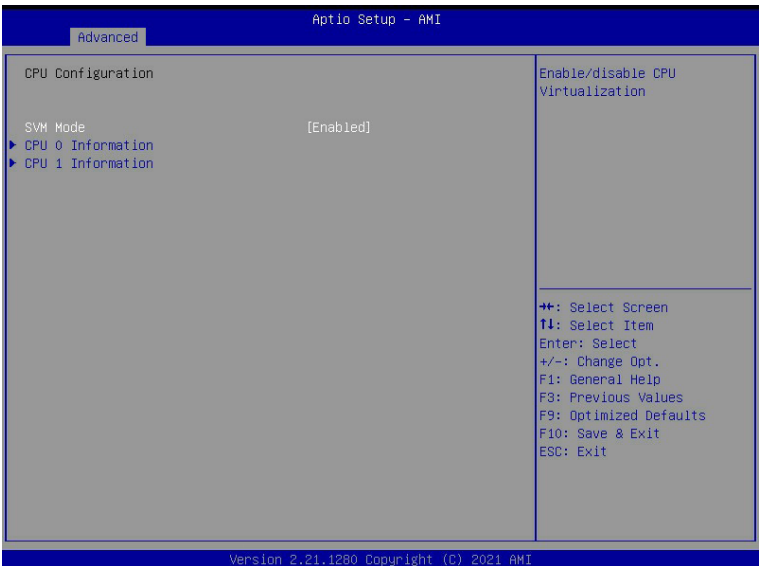

Parameter	Description
CPU Configuration	
SVM Mode	Enable/disable the CPU Virtualization. Options available: Enabled/Disabled. Default setting is **Enabled**.
SMEE	Controls the Secure Memory Encryption Enable (SMEE) function. Options available: Enabled/Disabled. Default setting is **Enabled**.
CPU 0 Information	Press [Enter] to view more information related to CPU 0.
CPU 1 Information	Press [Enter] to view more information related to CPU 1.

5-2-8 PCI Subsystem Settings

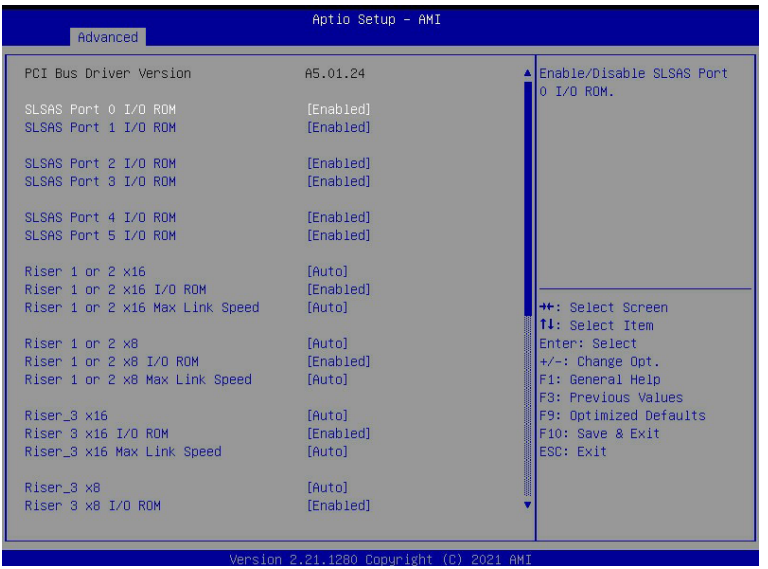

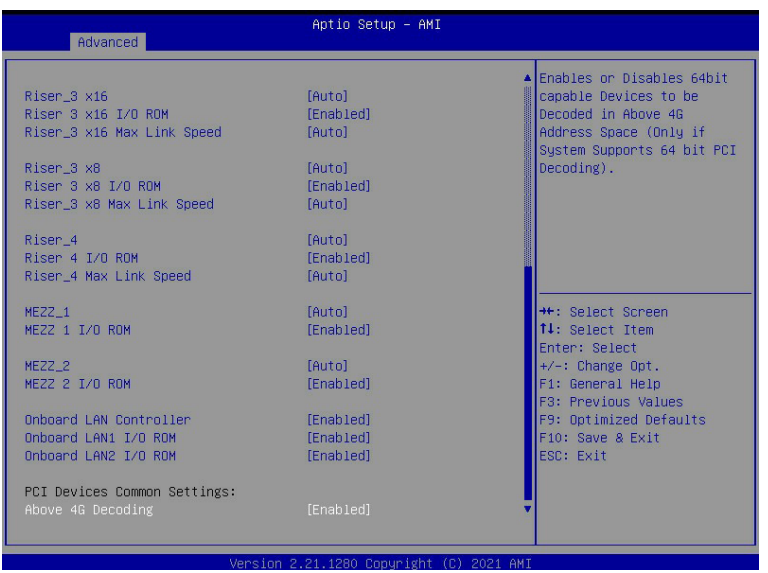

Parameter	Description
PCI Bus Driver Version	Displays the PCI Bus Driver version information.
SLOT1_F / SLOT1_R / SLOT2_F / SLOT2_R / SLOT3 / OCP1 / OCP2 Lanes(Note1)	Change the PCIe lanes. Options available: Auto / x16 / x8 x8 / x8 x4 x4 / x4 x4 x8 / x4 x4 x4 x4 (OCP2 Lanes only features Auto / x8 / x4 x4.) Disabled. Default setting is **Auto**.
SLOT1_F / SLOT1_R / SLOT2_F / SLOT2_R / SLOT3 / OCP1 / OCP2 I/O ROM(Note1)	When enabled, this setting will initialize the device expansion ROM for the related PCI-E slot. Options available: Enabled/Disabled. Default setting is **Enabled**.
Onboard LAN Controller(Note2)	Enable/Disable the onboard LAN devices. Options available: Enabled/Disabled. Default setting is **Enabled**.
Onboard LAN I/O ROM(Note2)	Enable/Disable the onboard LAN devices and initializes device expansion ROM. Options available: Enabled/Disabled. Default setting is **Enabled**.
PCI Devices Common Settings	
Above 4G Decoding	Enable/Disable memory mapped I/O to 4GB or greater address space (Above 4G Decoding). Options available: Enabled/Disabled. Default setting is **Enabled**.
SR-IOV Support	If the system has SR-IOV capable PCIe devices, this item Enable/Disable Single Root IO Virtualization Support. Options available: Enabled/Disabled. Default setting is **Enabled**.

(Note1) This section is dependent on the available PCIe Slot.

(Note2) This section is dependent on the available LAN controller.

5-2-9 USB Configuration

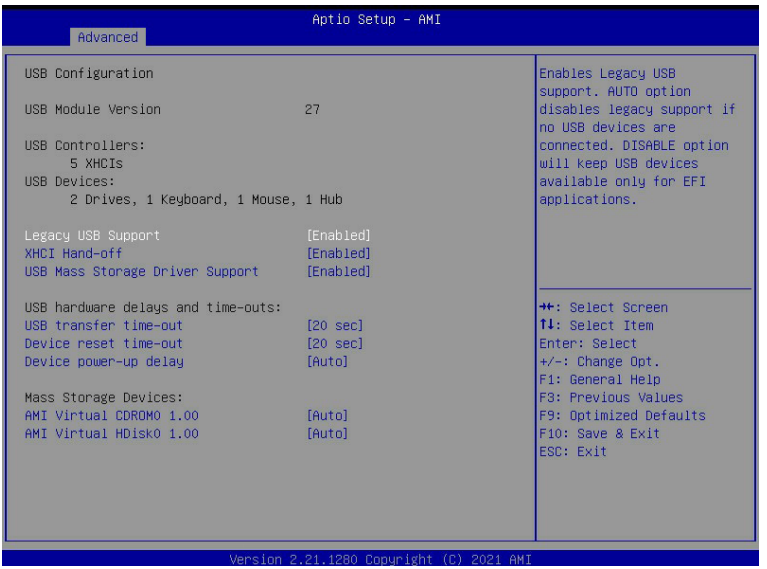

Parameter	Description
USB Configuration	
USB Module Version	Displays the USB version.
USB Controllers	Displays the supported USB controllers.
USB Devices	Displays the USB devices connected to the system.
Legacy USB Support	Enable/disable the Legacy USB support fuction. AUTO option disables legacy support if no USB devices are connected. DISABLE option will keep USB devices available only for EFI applications. Options available: Auto/Enabled/Disabled. Default setting is **Enabled**.
XHCI Hand-off	Enable/Disable the XHCI (USB 3.0) Hand-off support. Options available: Enabled/Disabled. Default setting is **Enabled**.
USB Mass Storage Driver Support(Note)	Enable/Disable the USB Mass Storage Driver Support. Options available: Enabled/Disabled. Default setting is **Enabled**.
Port 60/64 Emulation	Enables the I/O port 60h/64h emulation support. This should be enabled for the complete USB Keyboard Legacy support for non-USB aware OS. Options available: Enabled/Disabled. Default setting is **Enabled**.
USB hardware delays and time-outs	
USB transfer time out	The time-out value for Control, Bulk, and Interrupt transfers. Options available: 1 sec/5 sec/10 sec/20 sec. Default setting is **20 sec**.

(Note) This item is present only if you attach USB devices.

Parameter	Description
Device reset time-out	USB mass storage device Start Unit command time-out. Options available: 10 sec/20 sec/30 sec/40 sec. Default setting is **20 sec**.
Device power-up delay	Maximum time the device will take before it properly reports itself to the Host Controller. "Auto" uses default value: for a Root port it is 100 ms, for a Hub port the delay is taken from Hub descriptor. Options available: Auto/Manual. Default setting is **Auto**.
Mass Storage Devices	
AMI Virtual CDROM0 1.00 / HDisk0 1.00	Mass storage device emulation type. AUTO enumerates devices according to their media format. Optical drives are emulated as CDROM, drives with no media will be emulated according to a drive type. Options available: Auto/Floppy/Forced FDD/Hard Disk/CD-ROM. Default setting is **Auto**.

5-2-10 Network Stack Configuration

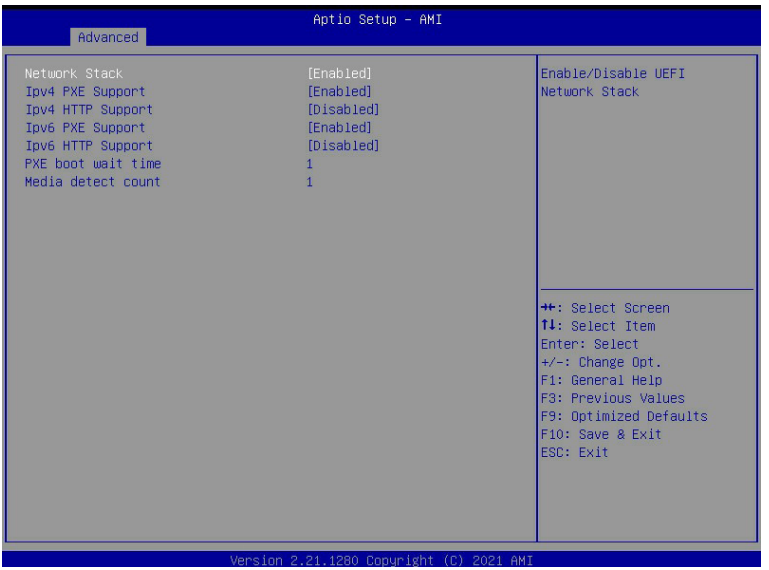

Parameter	Description
Network Stack	Enable/Disable the UEFI network stack. Options available: Enabled/Disabled. Default setting is **Enabled**.
Ipv4 PXE Support(Note)	Enable/Disable the Ipv4 PXE feature. Options available: Enabled/Disabled. Default setting is **Enabled**.
Ipv4 HTTP Support(Note)	Enable/Disable the Ipv4 HTTP feature. Options available: Enabled/Disabled. Default setting is **Disabled**.
Ipv6 PXE Support(Note)	Enable/Disable the Ipv6 PXE feature. Options available: Enabled/Disabled. Default setting is **Disabled**.
Ipv6 HTTP Support(Note)	Enable/Disable the Ipv6 HTTP feature. Options available: Enabled/Disabled. Default setting is **Disabled**.
IPSEC Certificate(Note)	Enable/Disable the IPSEC Certificate feature.
PXE boot wait time(Note)	Wait time in seconds to press ESC key to abort the PXE boot. Press the <+> / <-> keys to increase or decrease the desired values.
Media detect count(Note)	Number of times the presence of media will be checked. Press the <+> / <-> keys to increase or decrease the desired values.

(Note) This item appears when **Network Stack** is set to **Enabled**.

5-2-11 NVMe Configuration

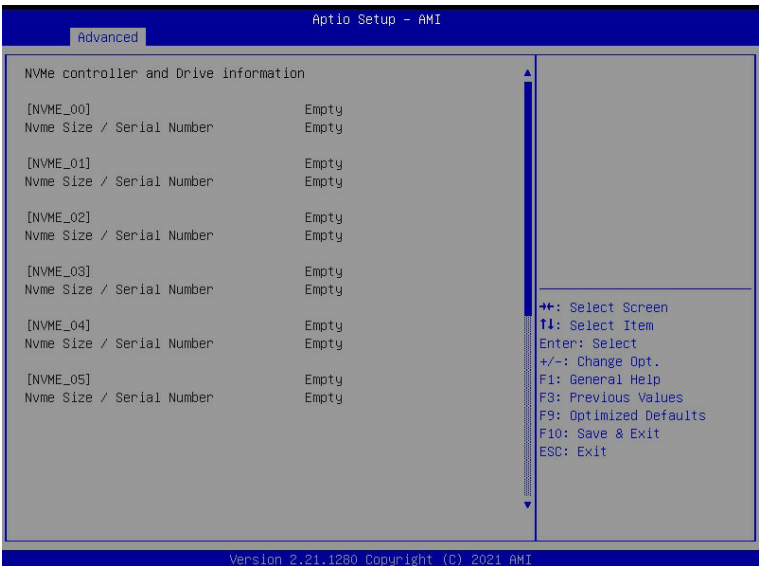

Parameter	Description
NVMe controller and Drive Information	Displays the NVMe devices connected to the system.

5-2-12 Offboard SATA Controller Configuration

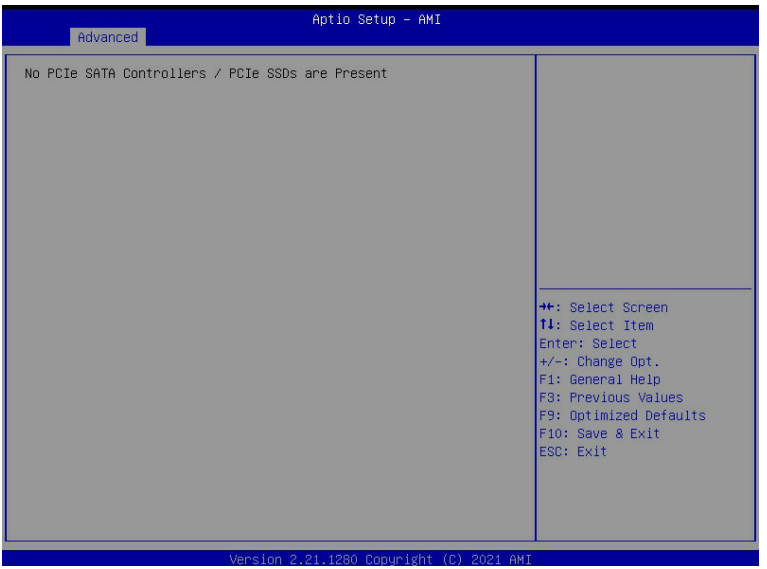

5-2-13 SATA Configuration



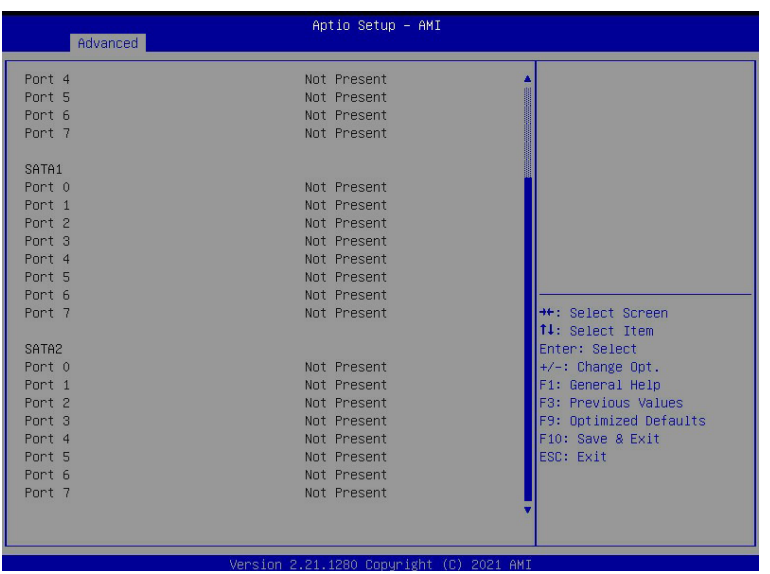

5-2-14 Graphic Output Configuration

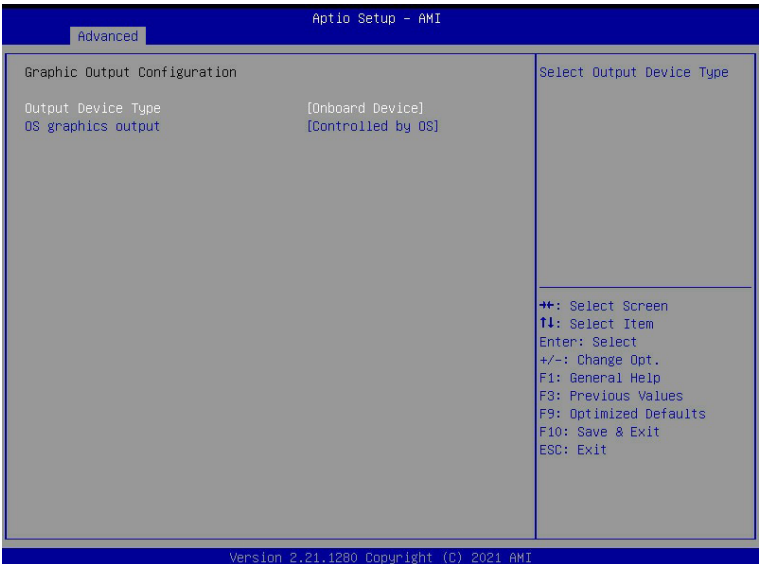

Parameter	Description
Output Device Type	Option: First loaded Device/Onboard Device/External Device/Specific Device
OS graphics output	Option: Control by OS/ Onboard VGA

5-2-15 AMD Mem Configuration Status

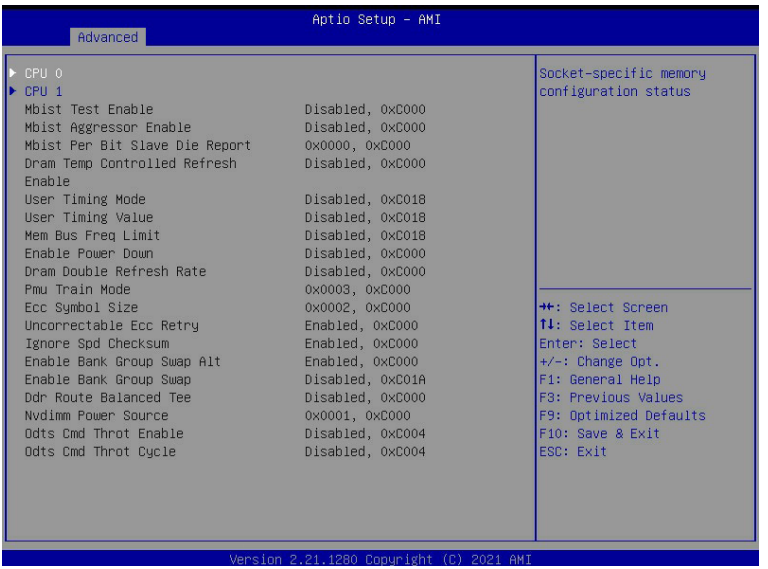

Parameter	Description
CPU 0	Press [Enter] for configuration of advanced items. ◆ Channel A/BC/D/E/F/G/H – DIMM0 Presence – DIMM1 Presence – Chipset/Bank Interleave ◆ Dram EC ◆ Dram Parity ◆ Dimm Sensor Fine Grain Mode
CPU 1	Press [Enter] for configuration of advanced items. ◆ Channel I/J/K/L/M/N/O/P – DIMM0 Presence – DIMM1 Presence – Chipset/Bank Interleave ◆ Dram EC ◆ Dram Parity ◆ Dimm Sensor Fine Grain Mode

5-2-16 Tls Auth Configuration

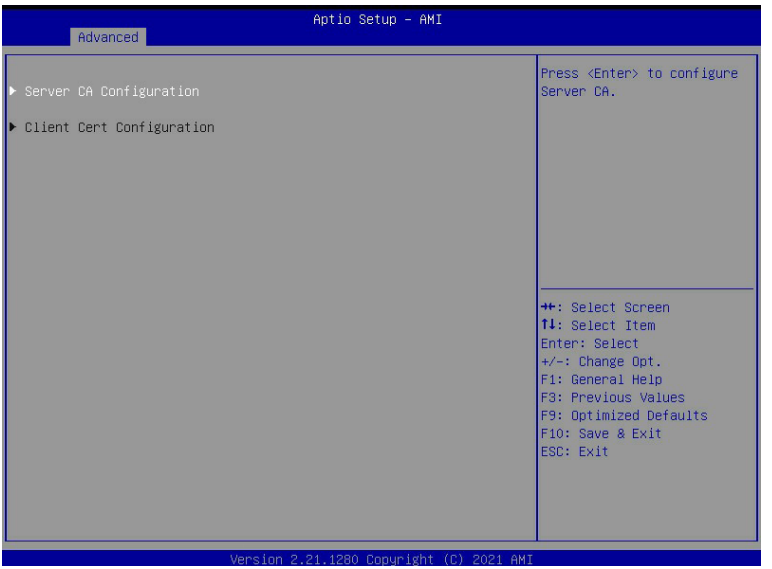

Parameter	Description
Server CA Configuration	Press [Enter] for configuration of advanced items. ◆ Enroll Cert – Press [Enter] to enroll a certificate • Enroll Cert Using File • Cert GUID Input digit character in 1111111-2222-3333-4444-1234567890ab format. – Commit Changes and Exit – Discard Changes and Exit ◆ Delete Cert
Client Cert Configuration	N/A

5-2-17 iSCSI Configuration

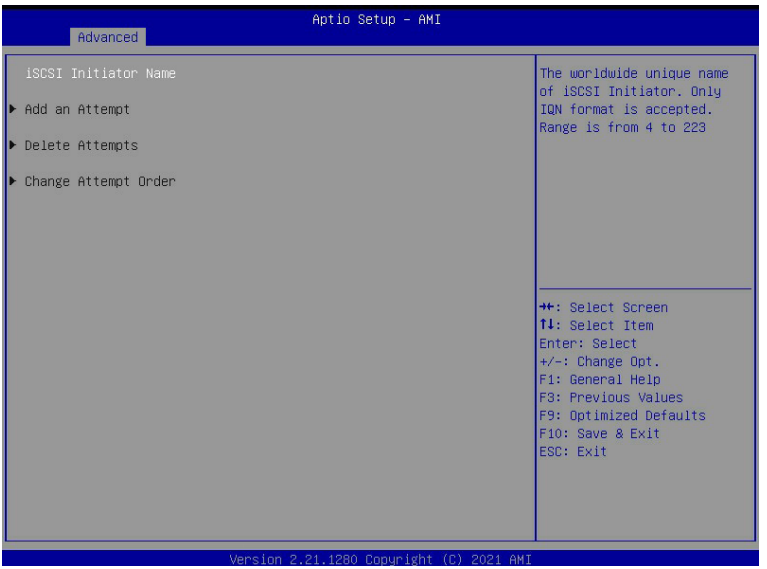

Parameter	Description
iSCSI Initiator Name	Press [Enter] and name iSCSI Initiator. Only IQN format is accecpted. Range: from 4 to 223
Add Attempt	Press [Enter] for configuration of advanced items.
Delete Attempt	Press [Enter] for configuration of advanced items.
Change Attempt Order	Press [Enter] for configuration of advanced items.

5-2-18 Intel(R) I350 Gigabit Network Connection

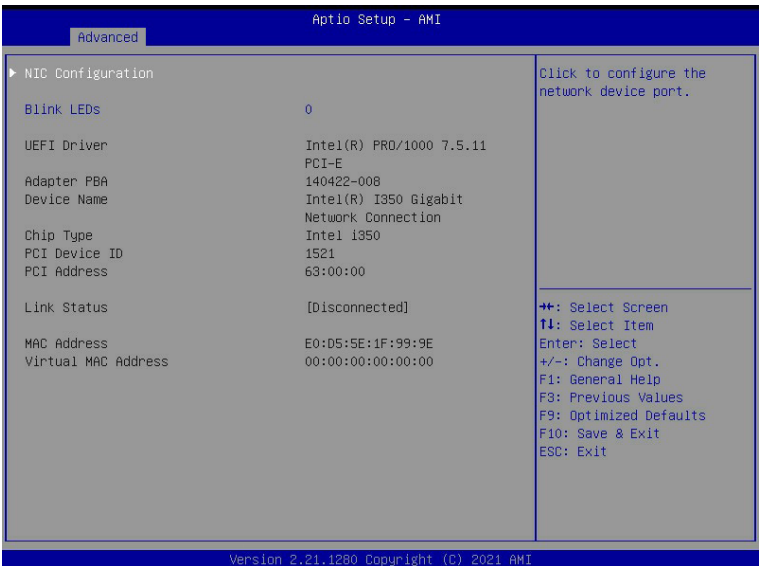

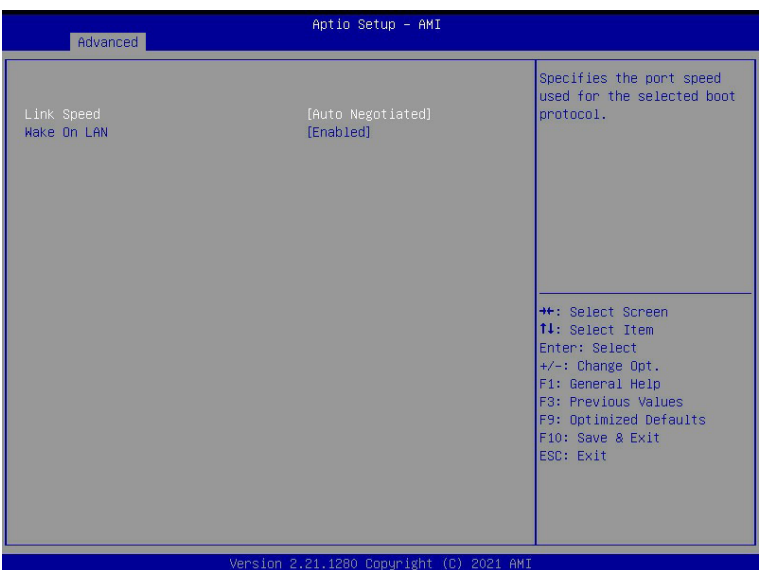

Parameter	Description
NIC Configuration	Press [Enter] to configure advanced items. ◆ Link Speed – Allows for automatic link speed adjustment. – Options available: Auto Negotiated/10 Mbps Half/10 Mbps Full/100 Mbps Half/100 Mbps Full. Default setting is **Auto Negotiated**. ◆ Wake On LAN – Enables power on of the system via LAN. Note that configuring Wake on LAN in the operating system does not change the value of this setting, but does override the behavior of Wake on LAN in OS controlled power states. – Options available: Enabled/Disabled. Default setting is **Enabled**.
Blink LEDs	Identifies the physical network port by blinking the associated LED. Press the numeric keys to adjust desired values.
UEFI Driver	Displays the technical specifications for the Network Interface Controller.
Adapter PBA	Displays the technical specifications for the Network Interface Controller.
Device Name	Displays the technical specifications for the Network Interface Controller.
Chip Type	Displays the technical specifications for the Network Interface Controller.
PCI Device ID	Displays the technical specifications for the Network Interface Controller.
PCI Address	Displays the technical specifications for the Network Interface Controller.
Link Status	Displays the technical specifications for the Network Interface Controller.
MAC Address	Displays the technical specifications for the Network Interface Controller.
Virtual MAC Address	Displays the technical specifications for the Network Interface Controller.

5-2-19 VLAN Configuration

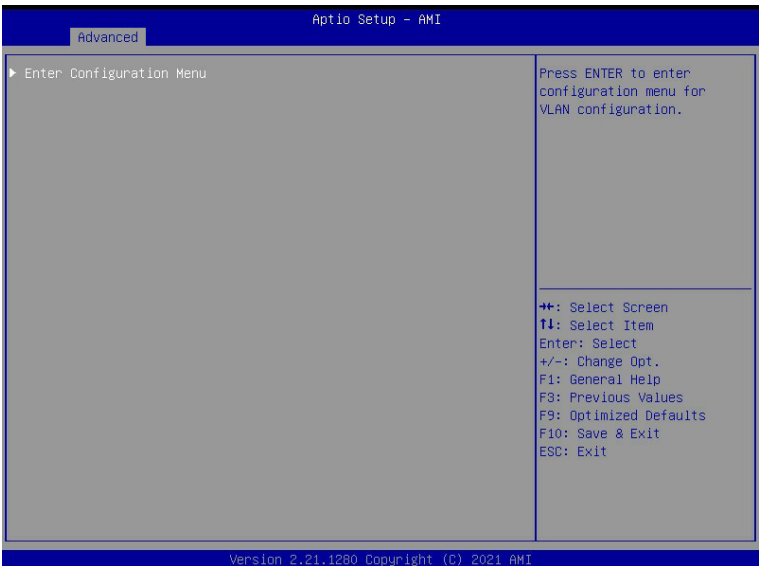

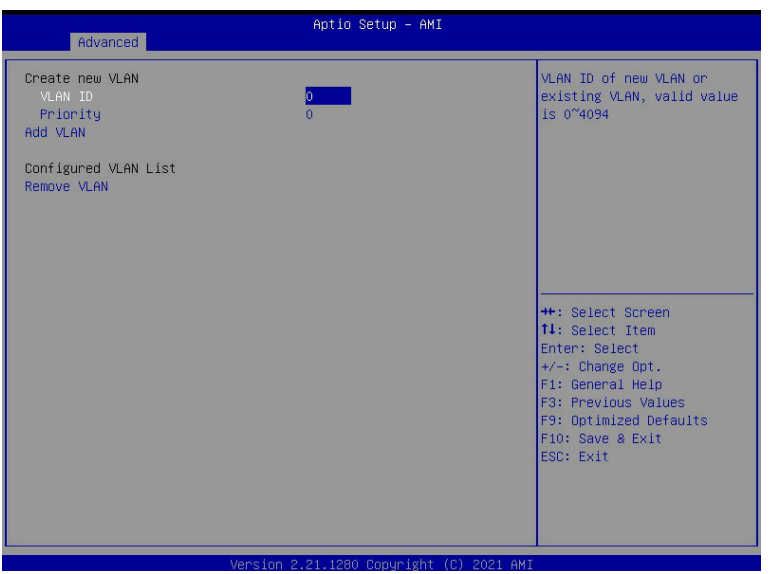

Parameter	Description
Enter Configuration Menu	Press [Enter] to configure advanced items. ◆ Create new VLAN ◆ VLAN ID – Sets VLAN ID for a new VLAN or an existing VLAN. – Press the <+> / <-> keys to increase or decrease the desired values. The valid range is from 0 to 4094. ◆ Priority – Sets 802.1Q Priority for a new VLAN or an existing VLAN. – Press the <+> / <-> keys to increase or decrease the desired values. The valid range is from 0 to 7. ◆ Add VLAN – Press [Enter] to create a new VLAN or update an existing VLAN. ◆ Configured VLAN List – Enable/Disable the VLAN. – Options available: Enable/Disable. Default setting is **Disabled**. ◆ Remove VLAN – Press [Enter] to remove an existing VLAN.

(Note) Only Supported when **Configured VLAN List** is set to **Enabled**.

5-2-20 MAC IPv4 Network Configuration

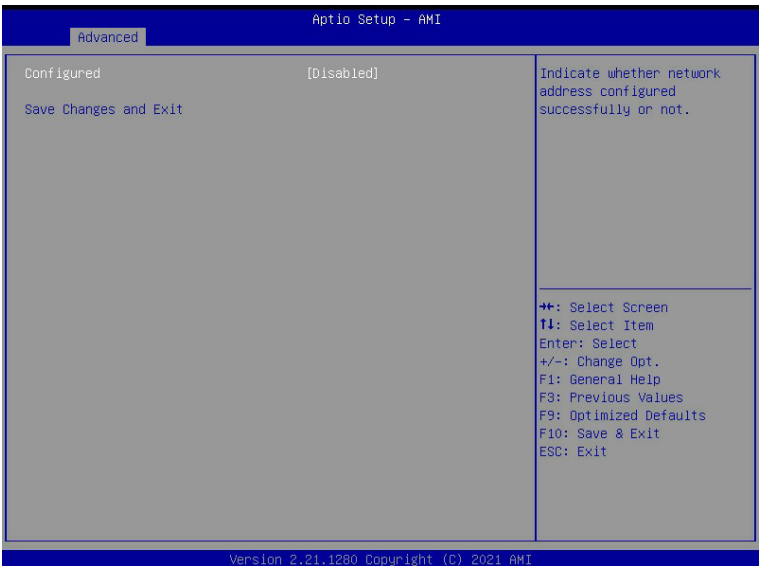

Parameter	Description
Configured	Indicates whether network address is configured successfully or not. Options available: Disabled/Enabled. Default setting is **Disabled**.
Enable DHCP(Note)	Options available: Enabled/Disabled. Default setting is **Enabled**.
Local IP Address(Note)	Press [Enter] to configure local IP address.
Local NetMask(Note)	Press [Enter] to configure local NetMask.
Local Gateway(Note)	Press [Enter] to configure local Gateway
Local DNS Servers(Note)	Press [Enter] to configure local DNS servers
Save Changes and Exit	Press [Enter] and then choose to save or discard the changes made.

(Note) This item will appear on the screen when **Configured** is set to **Enabled**.

5-2-21 MAC IPv6 Network Configuration

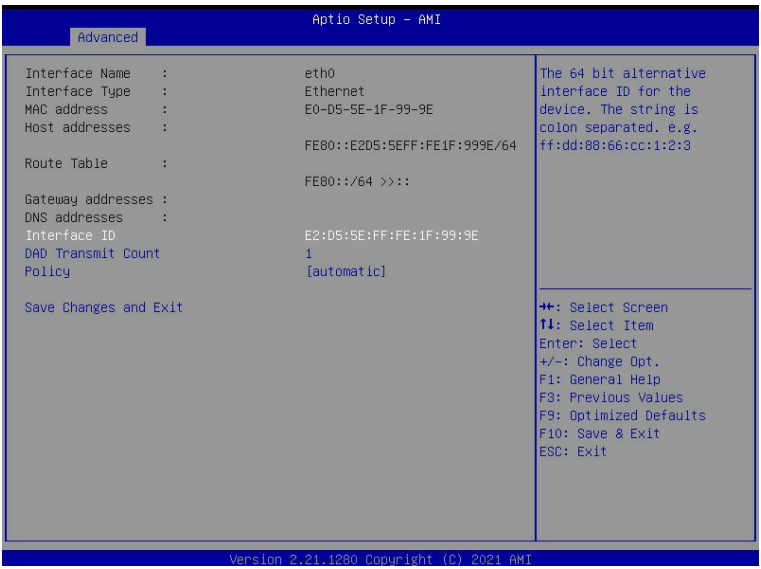

Parameter	Description
Enter Configuration Menu	Press [Enter] for configuration of advanced items. ◆ Interface Name ◆ Interface Type ◆ MAC address ◆ Host address ◆ Route Table ◆ Gateway addresses ◆ DNS addresses ◆ Interface ID – The 64-bit alternative interface ID for the device. The string is colon separated e.g. ff:dd:88:66:cc:1:2:3. ◆ DAD Transmit Count – The number of consecutive Neighbor Solicitaion messages sent while performing Duplicate Address Detection on a tentative address. A value of zero indicates that Duplicate Addres Detection is not performed. ◆ Policy ◆ Save Changes and Exit

5-3 AMD CBS Menu

AMD CBS menu displays submenu options for configuring the CPU-related information that the BIOS automatically sets. Select a submenu item, then press [Enter] to access the related submenu screen.

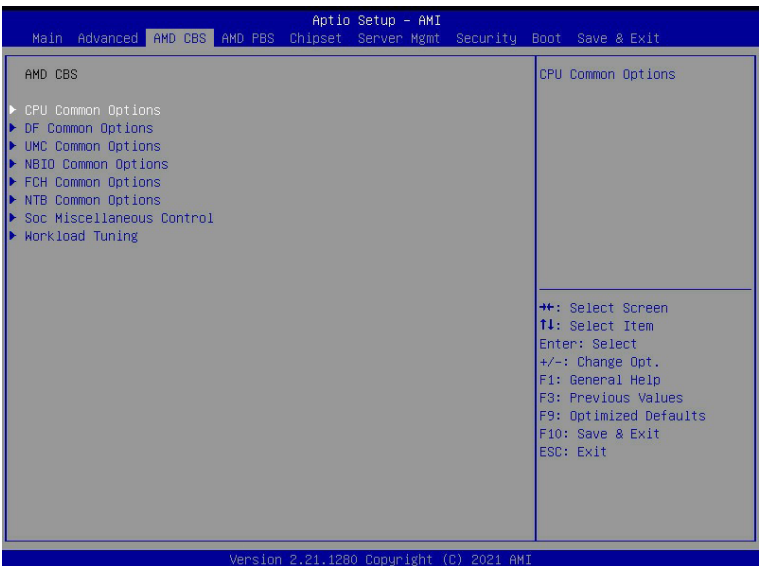

5-3-1 CPU Common Options

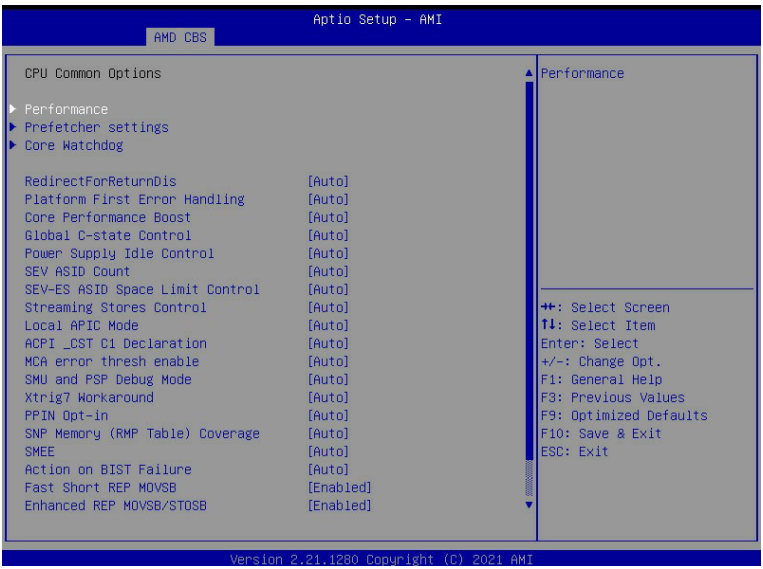

Parameter	Description
CPU Common Options	
Performance	Press [Enter] for more options. ◆ Custom Core Pstates – Allows you to accept or decline custom core pstates. When accepted you can disable or customize ceratin pstates. ◆ CCD/Core/Thread Enablement – Allows you to accept or decline enabling CCDs, processor cores and threads. When accepted you can control the number of CCDs to be used, the number of cores to be used, and whether to enable or disable symmetric multithreading.
Prefetcher settings	Press [Enter] for more options. ◆ L1 Stream HW Prefetcher – Option to enable or disable L1 Stream HW Prefetcher – Options available: Disable/Enable/Auto. Default option is **Auto**. ◆ L2 Stream HW Prefetcher – Option to enable or disable L2 Stream HW Prefetcher – Options available: Disable/Enable/Auto. Default option is **Auto**.
Core Watchdog	Press [Enter] for more options. ◆ Core Watchdog Timer Enable – Enable or disable CPU watchdog timer. – Options available: Disable/Enable/Auto. Default option is **Auto**.

Parameter	Description
RedirectForReturnDis	From a workaroud for GCC/C000005 issue for XV Core on CZ A0, setting MSRC001_1029 Decode Configuration (DE_CFG) bit 14 [DecfgNoRdrctForReturns] to 1. Options available: Auto/1/0. Default option is **Auto**.
Platform First Error Warning	Enable/Disable PFEH, cloak individual banks, and mask deferred error interrupts from each bank. Options available: Enabled/Disabled/Auto. Default option is **Enabled**.
Core Performance Boost	Allows you to disable CPB. Options available: Disabled/Auto. Default option is **Auto**.
Global C-State Control	Controls the IO based C-state generation and DF C-states. Options available: Disabled/Enabled/Auto. Default option is **Auto**.
Power Supply Idle Control	Configures the power supply idle control. Options available: Low Current Idle/Typical current Idle/Auto. Default option is **Auto**.
Opcache Control	Enables or disables the Opcache. Options available: Disabled/Enabled/Auto. Default option is **Auto**.
SEV ASID Count	This field specifies the max. valid ASID, which affects the maximum system physical address space. 16TB of physical address space is available for systems that support 253 ASIDs, while 8TB of physical address space is available for systems that support 509 ASIDs. Options available: 253 ASIDs/509 ASIDs/Auto. Default option is **Auto**.
SEV-ES ASID Space Limit Control	Space limit control for SEV-ES ASIDs. Options available: Auto/Manual. Default option is **Auto**.
Streaming Stores Control	Enables or disables the streaming stores functionality. Options available: Disabled/Enabled/Auto. Default option is **Auto**.
Local APIC Mode	Sets the Local APIC mode. Options available: xAPIC/x2APIC/Auto. Default option is **Auto**.
ACPI_CST C1 Decaration	Determines whether or not to declare the C1 state to the OS. Options available: Disabled/Enabled/Auto. Default option is **Auto**.
MCA error thresh enable	Enable MCA error thresholding. Options available: False/True/Auto. Default option is **Auto**.
SMU and PSP Debug Mode	When this option is enabled, specific uncorrected errors detected by the PSP FW or SMU FW will hand and not reset the system. Options available: Disabled/Enabled/Auto. Default option is **Auto**.

Parameter	Description
Xtrig7 Workaround	By default (Auto) the bronze workaround is applied. Bronze workaround: DbReq and PDM function as expected, breakpoint redirect capability compromised. Silver workaround: DbReq, PDM, and breakpoint redirect function as expected, SCAN capability compromised. Options available: Auto/No Workaround/Bronze Workaround/Silver Workaround. Default option is **Auto**.
PPIN Opt-in	Turns on PPIN feature. Options available: Disabled/Enabled/Auto. Default option is **Auto**.

5-3-2 DF Common Options

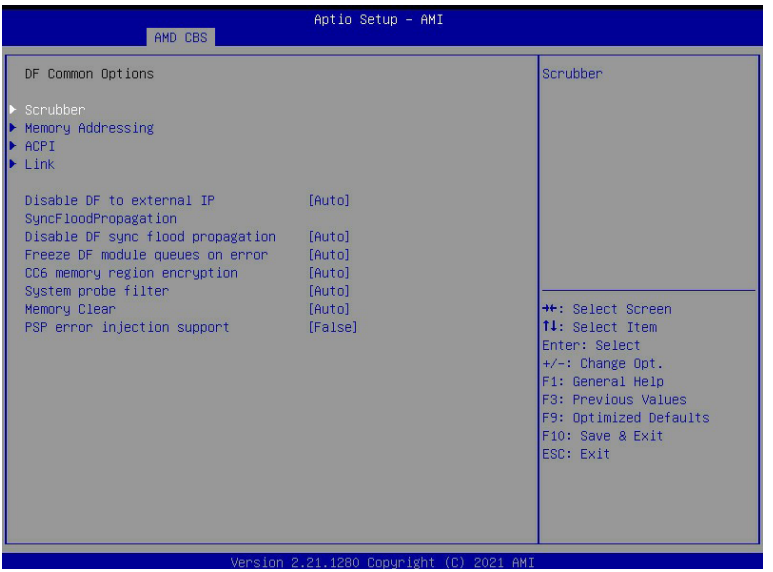

Parameter	Description
Scrubber	Press [Enter] for configuration of advanced items. ◆ DRAM scrub time – Provides a value that is the number of hours to scrub memory. – Options available: Disabled/1 hour/4 hours/8 hours/16 hours/24 hours/48 hours/Auto. Default option is **Auto**. ◆ Poison scrubber control – Allows you to enable or disable poison scrubber control. – Options available: Disabled/Enabled/Auto. Default option is **Auto**. ◆ Redirect scrubber control – Allows you to enable or disable redirect of scrubber control. – Options available: Disabled/Enabled/Auto. Default option is **Auto**. ◆ Redirect scrubber limit – Allows you to set the redirect scrubber limit. – Options available: 2/4/8/Infinite/Auto. Default option is **Auto**.

Parameter	Description
Memory Addressing	Press [Enter] for more options. ◆ NUMA notes per socket – Specifies the number of desired NUMA (Non-uniform Memory Access) notes per socket. Zero will attempt to interleave the two sockets together. – Options available: NPS0/NPS1/NPS2/NPS4/Auto. Default option is **Auto**. ◆ Memory interleaving – Allows for disabling memory interleaving. Note that NUMA nodes per socket will be honored regardless of this setting. – Options available: Disabled/Auto. Default option is **Auto**. ◆ Memory interleaving size – Controls the memory interleaving size. The valid value are AUTO, 256 bytes, 512 bytes, 1Kbytes or 2Kbytes. This determines the starting address of the interleave (bit 8, 9, 10 or 11). – Options available: 256 Bytes/512 Bytes/1 KB/2KB/Auto. Default setting is **Auto**. ◆ 1TB remap – Attempt to remap DRAM out of the space just below the 1TB boundary. The ability to remap depends on DRAM configuration, NPS, and interleaving selection, and may not always be possible. – Options available: Do not remap/Attempt to remap.Auto. Default option is **Auto**. ◆ DRAM map inversion – Inverting the map will cause the highest memory channels to get assigned the lowest addresses in the system. – Options available: Disabled/Enabled/Auto. Default option is **Auto**.
ACPI	Press [Enter] for more options. ◆ ACPI SRAT L3 Cache as NUMA Domain – Enabled: Each CCX in the system will be declared as a separate NUMA domain. – Disabled: Memory Addressing \ NUMA nodes per socket will be declared. – Options available: Disable/Enable/Auto. Default option is **Auto**. ◆ ACPI SLIT Distance Control – Determines how the SLIT distances are declared. – Options available: Manual/Auto. Default option is **Auto**. ◆ ACPI SLIT remote relative distance – Set the remote socket distance for 2P systems as near (2.8) or far (3.2). – Options available: Near/Far/Auto. Default option is **Auto**.

Parameter	Description
Link	Press [Enter] for more options. ◆ GMI encryption control – Control GMI link encryption. – Options available: Disable/Enable/Auto. Default option is **Auto**. ◆ xGMI encryption control – Control xGMI link encryption.Options available: Disable/Enable/Auto. Default option is **Auto**. ◆ CAKE CRC perf bounds control – Control CAKE CRC perf bounds – Options available: Auto/Manual. Default option is **Auto**. ◆ 4-link xGMI max speed – Set 4-link xGMI max speed. – Options available: 10.667Gbps/13Gbps/16Gbps/18Gbps/Auto. Default option is **Auto**. ◆ 3-link xGMI max speed – Set 3-link xGMI max speed. – Options available: 10.667Gbps/13Gbps/16Gbps/18Gbps/Auto. Default option is **Auto**. ◆ xGMI TXEQ Mode – Select XGMI TXEQ/RX vetting Mode. – Options available: TXEQ_Disabled/TXEQ_LAne/TXEQ_Link/TXEQ_RX_Vet/Auto. Default option is **Auto**.
Disable DF to external IP Sync Flood Propagation	Disable SyncFlood to UMC & downstream slaves. Options avaialble: Sync flood disabled/Sync flood enabled/Auto. Default option is **Auto**.
Disable DF sync flood propagation	Enable/Disable DF SyncFlood. Options avaialble: Sync flood disabled/Sync flood enabled/Auto. Default option is **Auto**.
Freeze DF module queues on error	Controls DF PIE Config. Disabling this options sets DF:PIEConfig. Options available: Disable/Enable/Auto. Default option is **Auto**.
CC6 memory region encryption	Control whether or not the CC6 save/restore memory is encrypted. Options available: Disable/Enable/Auto. Default option is **Auto**.
System probe filter	Controls whether or not the probe filter is enabled. Has no effect on parts where the probe filter is fuse disabled. Options available: Disable/Enable/Auto. Default option is **Auto**.
Memory Clear	When this feature is disabled, BIOS does not implement MemClear after memory training (only if non-ECC DIMMs are used). Options available: Disable/Enable/Auto. Default option is **Auto**.
PSP error injection support	Select **True** to enable error injection. Options available: False/True. Default option is **False**.

5-3-3 UMC Common Options

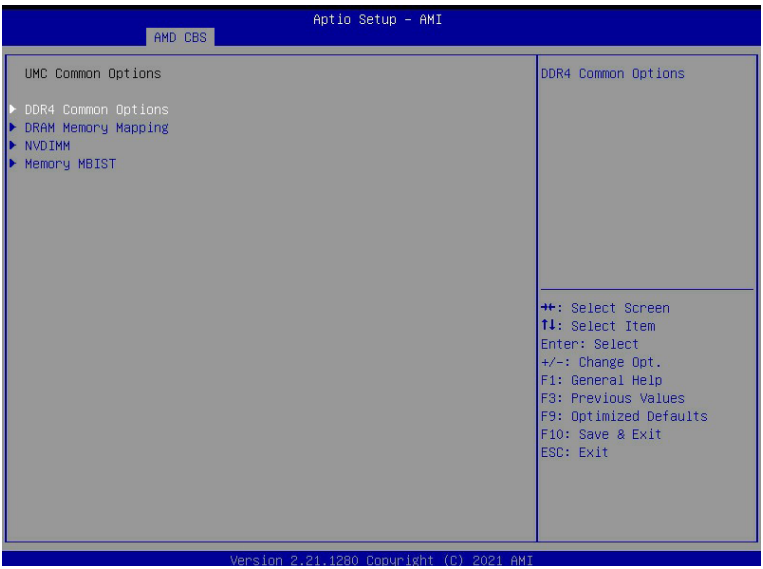

Parameter	Description
DDR4 Common Options	Press [Enter] for more options. ◆ Enforce POR – Press [Enter] to configure the enforcement of Plan Of Record (POR) which enables enforcement of POR restrictions for DDR4 frequency and voltage programming. Memory speeds will be capped at Intel guidelines. ◆ DRAM Controller Configuration – Press [Enter] to configure DRAM controller options. ◆ CAD Bus Configuration – Press [Enter] to configure CAD Bus options. ◆ Data Bus configuration – Press [Enter] to configure Data Bus options. ◆ Common RAS – Press [Enter] to configure Common RAS options. ◆ Security – Press [Enter] to configure UMC security options.

Parameter	Description
DRAM Memory Mapping	Press [Enter] for more options ◆ Chipselect Interleaving – Interleave memory blocks across the DRAM chip slects for node 0 – Options available: Disabled/Auto. Default option is **Auto**. ◆ BankGroupSwap – Configures the BankGroupSwap. BankGroupSwap (BGS) is a memory mapping option in AGESA that alters how applications get assigned to physical locations within the memory modules. When this option sets to Auto, it is null. – Options available: Enabled/Disabled/Auto. Default option is **Auto**. ◆ BankGroupSwapAlt – Configures the BankGroupSwapAlt. – Options available: Enabled/Disabled/Auto. Default option is **Auto**. ◆ Address Hash Bank – Enable or disable bank address hashing. – Options available: Disabled/Enabled/Auto. Default option is **Auto**. ◆ Address Hash CS – Enable or disable CS address hashing. – Options available: Auto/Enabled/Disabled. Default option is **Auto**. ◆ Address Hash Rm – Enable or disable RM address hashing. – Options available: Auto/Enabled/Disabled. Default option is **Auto**. ◆ SPD Read Optimization – Enable or disable SPD Read Optimization. Enabled = SPD reads are skipped for Reserved fields and most of upper 256 Bytes, Disabled = read all 512 SPD Bytes. – Options available: Auto/Enabled/Disabled. Default option is **Auto**.
NVDIMM	Press [Enter] for more options.
Memory MBIST	Press [Enter] for more options ◆ MBIST Enable – Enable or disable Memory MBIST. – Options available: Disabled/Enabled. Default option is **Disabled**. ◆ Data Eye – Press [Enter] for more options.

5-3-4 NBIO Common Options

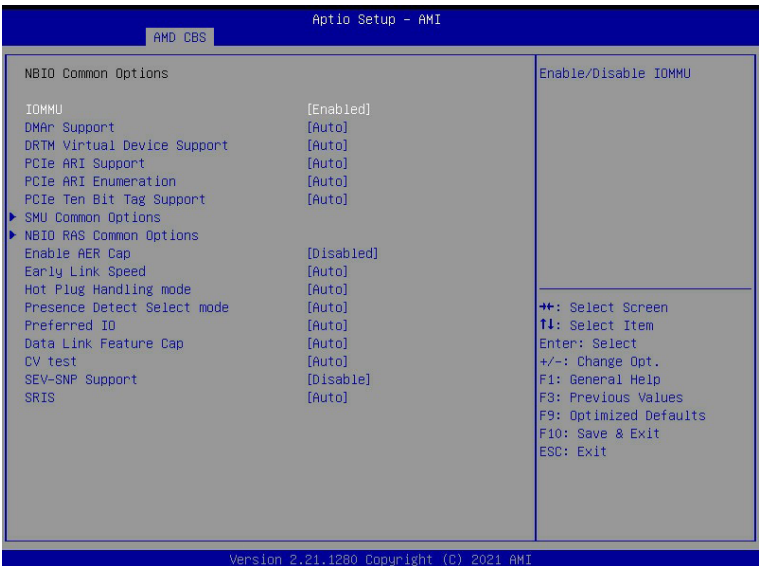

Parameter	Description
NBIO Common Options	
IOMMU	Enable/Disable IOMMU. Options available: Enabled/Disabled. Default setting is **Disabled**.
ACS Enable	AER must be enabled for ACS enable to work. Options available: Enable/Disabled/Auto. Default option is **Auto**.
PCIe ARI Support	Enables Alternative Routing ID Interpretation. Options available: Disable/Enable/Auto. Default option is **Auto**.
PCIe Ten Bit Tag Support	Enables PCIe ten bit tags for supported devices. Auto = Disabled Options available: Disable/Enable/Auto. Default option is **Auto**.
HD Audio Enable	Enables or disables HD Audio. Options available: Enable/Disabled/Auto. Default option is **Auto**.

Parameter	Description
SMU Common Options	Press [Enter] for more options. ◆ Determinism Control – Auto = Use the fused determinism, Manual = User can set customized determinism. – Options available: Manual/Auto. Default option is **Manual**. ◆ cTDP Control – Auto = Use the fused TDP, Manual = User can set customized TDP. TDP is used to define the RC thermal model only. – Options available: Manual/Auto. Default option is **Manual**. ◆ Fan Control – Press [Enter] to configure the fan control table. ◆ CLD0_VDDP Control – Manual = User can set customized CLD0_VDDP voltage. – Options available: Auto/Manual. Default option is **Auto**. ◆ EfficiencyModeEn – 0 = use performance optimized CCLK DPM settings, 1 = use power efficiency optimized CCLK DPM settings. – Options available: Auto/Enabled. Default option is **Auto**. ◆ Package Power Limit Control – Auto = Use the fused PPT, Manual = User can set PPT. PPT will be used as the ASIC power limit. – Options available: Manual/Auto. Default option is **Manual**. ◆ xGMI Link Width Control – Auto = Use degault xGMI link width controller, Manual = User can set custom xGMI link width controller settings. – Options available: Manual/Auto. Default option is **Auto**. ◆ APBDIS – 0 = not APBDIS (mission mode), 1 = APBDIS. – Options available: 0/1/Auto. Default option is **Auto**. ◆ DF Cstates – Enable or disable DF C-states. – Options available: Disabled/Enabled/Auto. Default option is **Auto**. ◆ CPPC – Enable or disable CPPC. – Options available: Disabled/Enabled/Auto. Default option is **Auto**. ◆ BoostFmaxEn – Auto = Use degault Fmax, Manual = User can set boost Fmax. – Options available: Manual/Auto. Default option is **Auto**.

Parameter	Description
NBIO RAS Common Options	Press [Enter] for more options. ◆ NBIO RAS Global Control – Options available: Manual/Auto. Default option is **Auto**. ◆ NBIO RAS Control – 0 = Disabled, 1 = MCA, 2 = Legacy. – Options available: Disabled/MCA/Legacy. Default option is **MCA**. ◆ Egress Poison Severity High – Enter a value. Each bit set to 1 enables high severity on the associated IOHC egress port. A bit of 0 indicates low severity. ◆ Egress Poison Severity Low – Enter a value. Each bit set to 1 enables high severity on the associated IOHC egress port. A bit of 0 indicates low severity. ◆ NBIO SyncFlood Generation – This value may be used to mask SyncFlood caused by NBIO RAS options. When set to TRUE SyncFlood from NBIO is masked. When set to FALSE NBIO is capable of generating SyncFlood. – Options available: Enabled/Disabled/Auto. Default option is **Auto**. ◆ NBIO SyncFlood Reporting – This value may be used to enable SyncFlood reporting to APML. When set to TRUE SyncFlood will be reported to APML. When set to FALSE that reporting will be disabled. – Options available: Enabled/Disabled. Default option is **Disabled**. ◆ Egress Poison Mask High – Enter a value. These set the enable mask for masking of errors logged in EGRESS_POISON_STATUS. For each bit set to 1, errors are masked. For each bit set to 0, errors trigger response actions. ◆ Egress Poison Mask Low – Enter a value. These set the enable mask for masking of errors logged in EGRESS_POISON_STATUS. For each bit set to 1, errors are masked. For each bit set to 0, errors trigger response actions. ◆ Uncorrected Converted to Poison Enable Mask High – Enter a value. These set the enable mask for masking of uncorrectable parity errors on internal arrays. For each bit set to 1, a system fatal error event is triggered for UCP errors on arrays associated with that egress port. For each bit set to 0, errors are masked. ◆ Uncorrected Converted to Poison Enable Mask Low – Enter a value. These set the enable mask for masking of uncorrectable parity errors on internal arrays. For each bit set to 1, a system fatal error event is triggered for UCP errors on arrays associated with that egress port. For each bit set to 0, errors are masked.

Parameter	Description
	◆ System Hub Watchdog Timer – Enter a value. This value specifies the timer interval of the SYSHUB watchdog timer in miliseconds. ◆ SLINK Read Response OK – This value specifies whether SLINK read response errors are converted to an Okay response. When this value is set to TRUE, read response errors are converted to Okay responses with data of all FFs. When set to FALSE read response errors are not converted. – Options available: Enabled/Disabled. Default option is Disabled. ◆ SLINK Read Response Error Handling – This value specifies whether SLINK write response errors are converted to an Okay response. When this value is set to 0, write response errors will be logged in the MCA. When set to 1, write response errors will trigger an MCOMMIT error. When this value is set to 2, write response errors are converted to Okay responses. – Options available: Enabled/Trigger MCOMMIT Error/Log Errors in MCA. Default option is Log Errors in **MCA**.
NBIO RAS Common Options (continued)	◆ Log Poison Data from SLINK – This value specifies whether poison data propogated from SLINK will generate a deferred error. When this value is set to TRUE, deferred errors are enabled. When set to FALSE, errors are not generated. – Options available: Enabled/Disabled. Default option is **Disabled**. ◆ PCIe Aer Reporting Mechanism – This value selects the method of reporting AER errors from PCI Express. A value of 0 indicates that the hardware will report the error through MCA. A value of 1 allows OS First handling of the errors through generation of a system control interrupt (SCI). A value of 2 provides for Firmware First handling of errors through generation of a system management interrupt (SMI). – Options available: OS First/MCA/Auto. Default option is **Auto**. ◆ Edpc Control – (0) Disabled; (1) Enabled; (3) Auto. – Options available: Disabled/Enabled/Auto. Default option is **Disabled**. ◆ NBIO Poison Consumption – Options available: Auto/Enabled/Disabled. Default option is **Auto**.

Parameter	Description
NBIO RAS Common Options (continued)	◆ Sync Flood on PCIe Fatal Error – When 'Sync Flood on PCIe Fatal Error' is True, PcdAmdPcieSyncFloodOnFatal should be set to True. When 'Sync Flood on PCIe Fatal Error' is False, PcdAmdPcieSyncFloodOnFatal should be set to False. When 'Sync Flood on PCIe Fatal Error' is Auto, PcdAmdPcieSyncFloodOnFatal should retain its AGESA default. – Options available: Auto/True/False. Default option is **Auto**.
Enable AER Cap	Enables Advanced Error Reporting Capabilty. Options available: Enable/Disabled/Auto. Default option is **Auto**.
Early Link Speed	Sets Early Link Speed. Options available: Auto/Gen1/Gen2. Default option is **Auto**.
Hot Plug Handling mode	Controls the Hot Plug Handling mode. Options available: A0 Mode/OS First (No Error Handling)/OS First (Error Handling - Not Implementd/Firmware First (Not Implemented)/Auto. Default option is **Auto**.
Presence Detect Select mode	Controls the Presence Detect Select mode. Options available: OR/And/Auto. Default option is **Auto**.
Preferred IO Device	Enter a value for the preferred IO device. [23:16] Bus Number [15:8] Dev Number [7:0] Fun Number

5-3-5 FCH Common Options

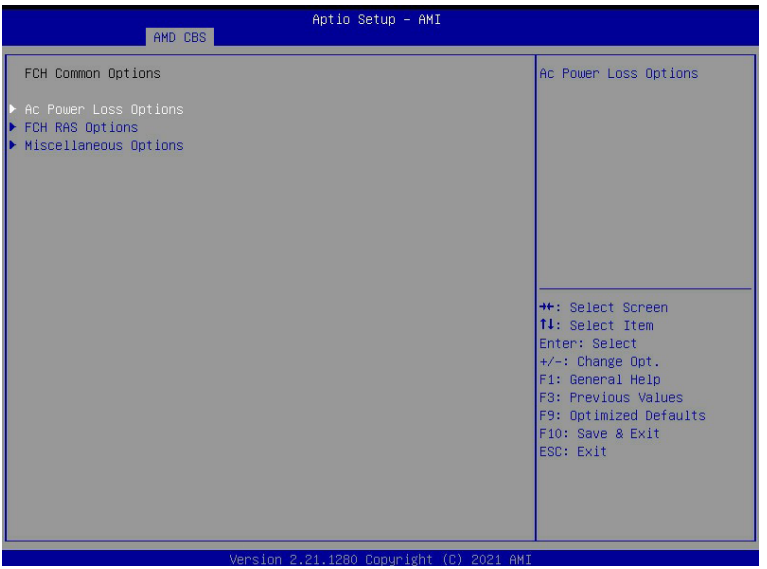

Parameter	Description
FCH Common Options	
SATA Configuration Options	◆ SATA Enable – Enable or disable OnChip SATA controller. – Options available: Disabled/Enabled/Auto. Default setting is **Auto**. ◆ SATA RAS Support – Enable or disable SATA RAS support. – Options available: Disabled/Enabled/Auto. Default setting is **Auto**. ◆ Sata Disabled AHCI Prefetch Function – Enable or disable Sata Disabled AHCI Prefetch Function. – Options available: Disabled/Enabled/Auto. Default setting is **Auto**. ◆ Aggressive SATA Device Sleep Port 0 – Options available: Disabled/Enabled/Auto. Default setting is **Auto**. ◆ Aggressive SATA Device Sleep Port 1 – Options available: Disabled/Enabled/Auto. Default setting is **Auto**.

Parameter	Description
USB Configuration Options	Press [Enter] for more options. ◆ XHCI Controller0 Enable – Enable or disable USB3 controller. – Options available: Enabled/Disabled/Auto. Default setting is **Auto**. ◆ XHCI Controller1 Enable – Enable or disable USB3 controller. – Options available: Enabled/Disabled/Auto. Default setting is **Auto**. ◆ USB ecc SMI Enable – Options available: Enabled/Off/Auto. Default setting is **Auto**. ◆ MCM USB enable – Press [Enter] for advanced configurations.
SD Dump Options	Press [Enter] for more options. ◆ SD Configuration Mode – Select SD Mode. – Options available: SD Dump disabled/SD Dump Enabled. Default setting is **SD Dump disabled**.
AC Power Loss Options	Press [Enter] for more options. ◆ AC Loss Control – Select AC Loss Control Method. – Options available: Power Off/Power On/Last State. Default setting is **Last State**.
I2C Configuration Options	Press [Enter] for more options. ◆ I2C 0/1/2/3/4/5 Enable – Enable or disable I2C 0/1/2/3/4/5. – Options available: Disabled/Enabled/Auto. Default setting is **Auto**.
Uart Configuration Options	Press [Enter] for more options. ◆ Uart 0 Enable – Uart 0 has no HW FC if Uart 2 is enabled. – Options available: Disabled/Enabled/Auto. Default setting is **Auto**. ◆ Uart 1 Enable – Uart 1 has no HW FC if Uart 3 is enabled. – Options available: Disabled/Enabled/Auto. Default setting is **Auto**. ◆ Uart 2 Enable (no HW FC) – Options available: Disabled/Enabled/Auto. Default setting is **Auto**. ◆ Uart 3 Enable (no HW FC) – Options available: Disabled/Enabled/Auto. Default setting is **Auto**.
ESPI Configuration Options	Press [Enter] for more options. ◆ ESPI Enable – Options available: Disabled/Enabled/Auto. Default setting is **Auto**.

Parameter	Description
eMMC Options	Press [Enter] for more options. ◆ eMMC/SD Configure – Options available: Disabled/SD Normal Speed/SD High Speed/SD UHSI-SDR50/SD UHSI-DDR50/SDUHSI-SDR104/eMMC Emmc Backward Compatibility/eMMC High Speed SDR/eMMC High Speed DDR/eMMC HS200/eMMCHS400/eMMC HS300/Auto. Default setting is **Auto**. ◆ Driver Type – BIOS will select MS driver for SD selections. – Options available: AMD eMMC Driver/MS Driver/Auto. Default setting is **Auto**. ◆ D3 Cold Support – Options available: Disabled/Enabled/Auto. Default setting is **Auto**. ◆ eMMC Boot – Options available: Disabled/Enabled/Auto. Default setting is **Auto**.
FCH RAS Options	Press [Enter] for more options. ◆ ALink RAS Support – Options available: Disabled/Enabled/Auto. Default setting is **Auto**. ◆ Reset after sync flood – Enable AB to forward downstream sync-flood message to system controller. – Options available: Disabled/Enabled/Auto. Default setting is **Auto**.

5-3-6 NTB Common Options

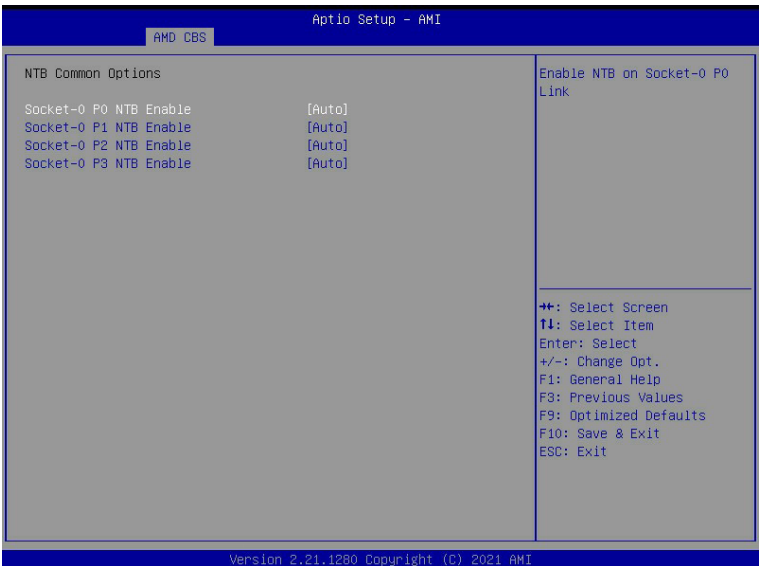

Parameter	Description
NTB Common Options	
NTB Enable	Enable or disable OnChip SATA controller. Options available: Auto/Enable. Default setting is **Auto**.

5-3-7 SOC Miscellaneous Control

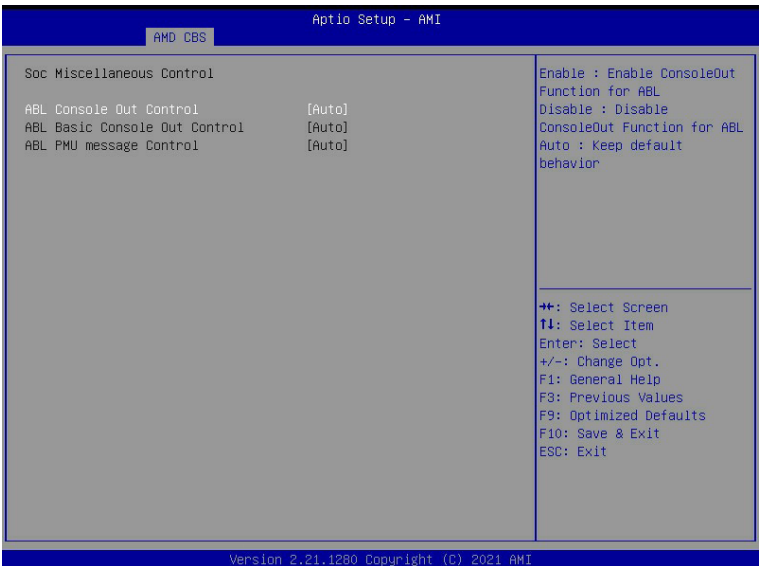

Parameter	Description
Soc Miscellaneous Control	
ABL Console Out Control	Enable = Enable ConsoleOut Function for ABL Disable = Disable ConsoleOut Function for ABL Auto = Keep default behavior Options available: Disable/Enable/Auto. Default setting is **Auto**.

5-4 AMD PBS Option Menu

AMD PBS Option menu displays submenu options for configuring the function of AMD PBS. Select a submenu item, then press [Enter] to access the related submenu screen.

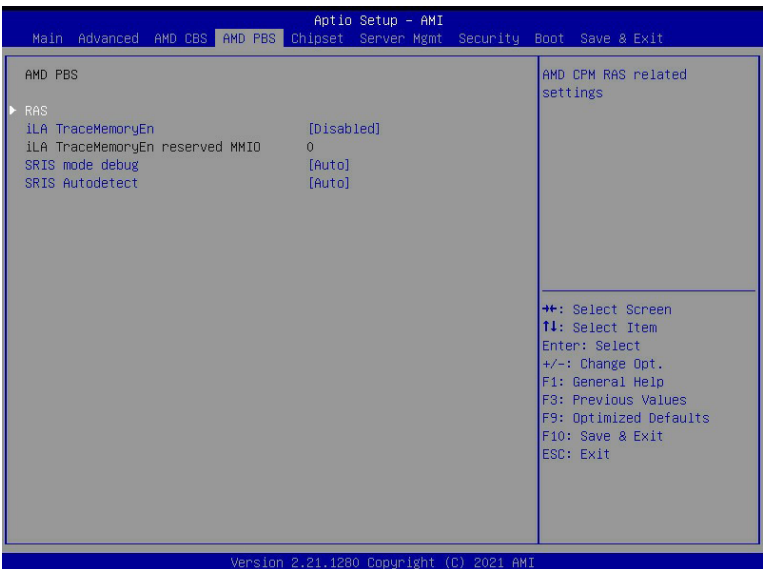

Parameter	Description
AMD PBS	
RAS	Press [Enter] for advanced configurations.
SPI Locking	Enable or disable SPI Locking for protect ROM part. Options Available: Enabled/Disabled. Default option is **Disabled**.

5-4-1 RAS



Parameter	Description
RAS Periodic SMI Control	Enable or disable Periodic SMI for polling [MCA Threshold] error. Options Available: Disabled/Enabled. Default option is **Enabled**.
SMI Threshold	Enter a value. Limits the number of [MCA Threshold and Deferred Error SMI source] per a unit of time (Defined by [SMI Scale]). Default value is **5 dec interrupts**.
SMI Scale	Enter a value. Defines the time scale. Default value is **1000 dec**.
SMI Scale Unit	Defines the unit of time scale. Options available: millisecond/second/minute. Default option is **millisecond**.
SMI Period	Enter a value. Defines the polling interval in milliseconds. Default option is **1000 dec**. Maximum value is 32767 dec. 0 = disable.
GHES Notify Type	Notification type for deferred/corrected errors. Options Available: Polled/SCI. Default option is **Polled**.
GHES UnCorr Notify Type	Notification type for uncorrected errors. Options Available: Polled/NMI. Default option is **NMI**.
PCIe GHES Notify Type	Notification type for PCIe corrected errors. Options Available: Polled/SCI. Default option is **Polled**.

Parameter	Description
PCIe UnCorr GHES Notify Type	Notification type for PCIe uncorrected errors. Options Available: Polled/NMI. Default option is **NMI**.
PCIe Root Port Corr Err Mask Reg	Enter a value. Intialize the PCIe AER Corrected Error Mask register of Root Port.
PCIe Root Port UnCorr Err Mask Reg	Enter a value. Intialize the PCIe AER Uncorrected Error Mask register of Root Port.
PCIe Root Port UnCorr Error Sev Reg	Enter a value. Intialize the PCIe AER Uncorrected Error Severity register of Root Port.
PCIe Device Corr Err Mask Reg	Enter a value. Intialize the PCIe AER Corrected Error Mask register of PCIe Device.
PCIe Device UnCorr Err Mask Reg	Enter a value. Intialize the PCIe AER Uncorrected Error Mask register of PCIe Device.
PCIe Device UnCorr Error Sev Reg	Enter a value. Intialize the PCIe AER Uncorrected Error Severity registers of PCIe Device.
CCIX GHES Deferred Err Notify Type	Notification type for CCIX deferred errors. Options Available: Polled/SCI. Default option is **Polled**.
CCIX GHES Corrected Err Notify Type	Notification type for CCIX corrected errors. Options Available: Polled/SCI. Default option is **Polled**.
DDR4 DRAM Hard Post Package Repair	This feature allows spare DRAM rows to replace malfunctioning rows via an in-field repair mechanism. Options Available: Disabled/Enabled. Default option is **Disabled**.
HEST DMC Structure Support	HEST DMC (Deferred Machine Check) Structure Support. Options Available: Disabled/Enabled. Default option is **Disabled**.

5-5 Chipset Setup Menu

Chipset Setup menu displays submenu options for configuring the function of the North Bridge. Select a submenu item, then press [Enter] to access the related submenu screen.



Parameter	Description
PCIe Link Training Type	PCIe Link training in 1 or 2 steps. Options available: 1 Step/2Step. Default setting is **1 Step**.
PCIe Compliance Mode	Options available: On/Off. Default setting is **Off**.
Program All VR	Enables or disables program all VR on MB. Options available: Disabled/Enabled. Default setting is **Enabled**.
North Bridge	Press [Enter] for more information on the North Bridge.

5-6 Server Management Menu

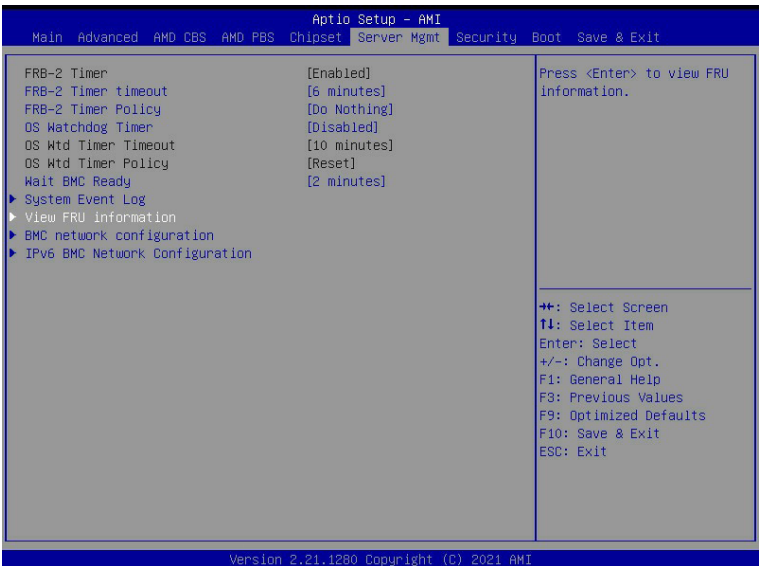

Parameter	Description
FRB-2 Timer	FRB-2 timer (POST timer).
FRB-2 Timer timeout	Configure the FRB2 Timer timeout. Options available: 3 minutes/4 minutes/5 minutes/6 minutes. Default setting is **6 minutes**. (NOTE) This item is configurable when FRB-2 Timer is set to Enabled.
FRB-2 Timer Policy	Configure the FRB2 Timer policy. Options available: Do Nothing/Reset/Power Down. Default setting is **Do Nothing**. (NOTE) This item is configurable when FRB-2 Timer is set to Enabled.
OS Watchdog Timer	Enable/Disable OS Watchdog Timer function. Options available: Enabled/Disabled. Default setting is **Disabled**.
OS Wtd Timer Timeout	Configure OS Watchdog Timer. Options available: 5 minutes/10 minutes/15 minutes/20 minutes. Default setting is **10 minutes**. (NOTE) This item is configurable when OS Watchdog Timer is set to Enabled.
OS Wtd Timer Policy	Configure OS Watchdog Timer Policy. Options available: Reset/Do Nothing/Power Down. Default setting is **Reset**. (NOTE) This item is configurable when OS Watchdog Timer is set to Enabled.
Wait BMC Ready	Configure time to wait BMC ready. Options available: Disabled/2 minutes/4 minutes/6 minutes. Default setting is **2 minutes**.
System Event Log	Press [Enter] to configure advanced items.

Parameter	Description
View FRU Information	Press [Enter] to view the advanced items.
BMC network configuration	Press [Enter] to configure advanced items.
IPv6 BMC Network Configuration	Press [Enter] to configure advanced items.

5-6-1 System Event Log

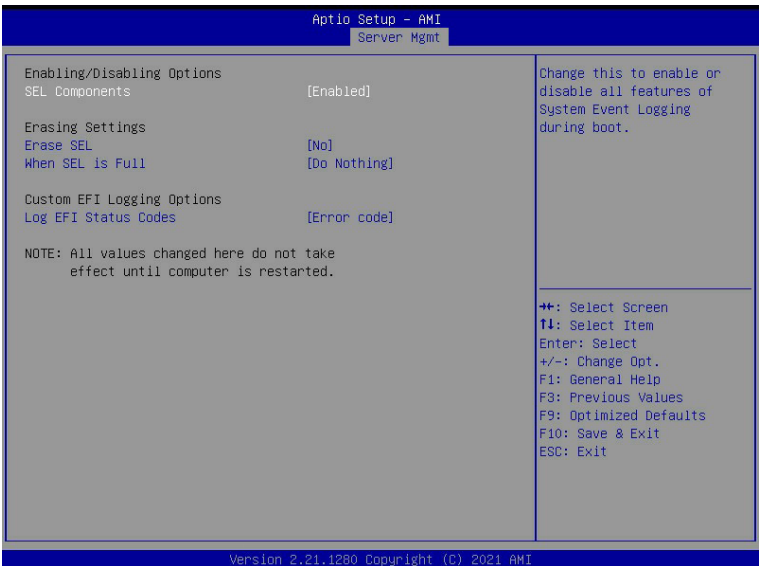

Parameter	Description
Enabling / Disabling Options	
SEL Components	Change this item to enable or disable all features of System Event Logging during boot. Options available: Enabled/Disabled. Default setting is **Enabled**.
Erasing Settings	
Erasing SEL	Choose options for erasing SEL. Options available: No/Yes, On next reset/Yes, On every reset. Default setting is **No**.
When SEL is Full	Choose options for reactions to a full SEL. Options available: Do Nothing/Erase Immediately. Default setting is **Do Nothing**.
Custom EFI Logging Options	
Log EFI Status Codes	Enable/Disable the logging of EFI Status Codes (if not already converted to legacy). Options available: Disabled/Both/Error code/Progress code. Default setting is **Error code**.

5-6-2 View FRU Information

The FRU page is a simple display page for basic system ID information, as well as System product information. Items on this window are non-configurable.

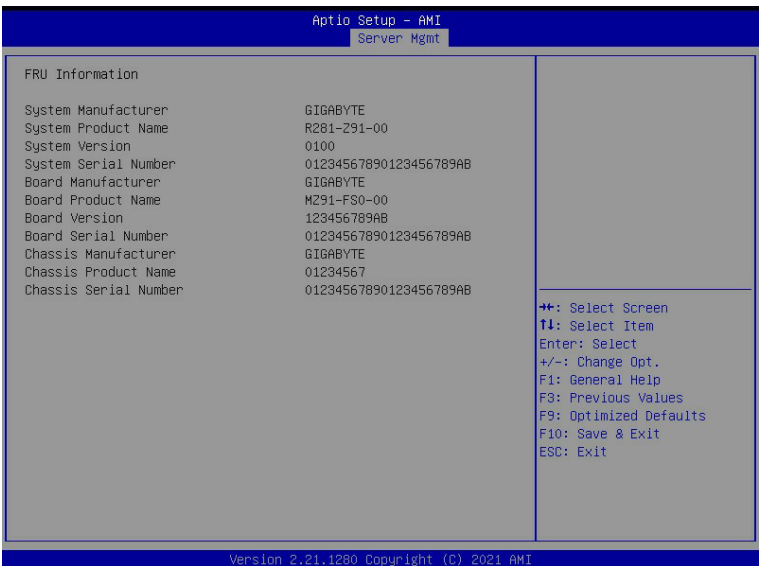

(Note) The model name will vary depends on the product you purchased.

5-6-3 BMC Network Configuration

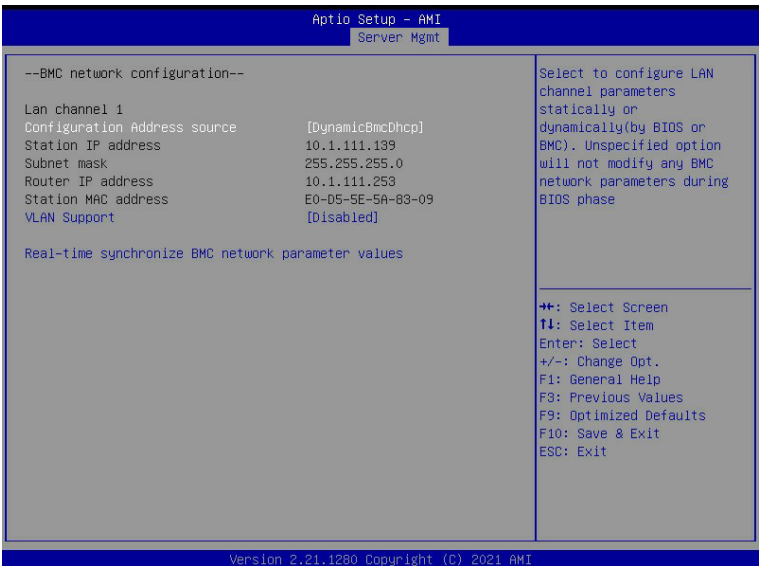

Parameter	Description
BMC network configuration	
Lan Channel 1	
Configuration Address source	Select to configure LAN channel parameters statically or dynamically (DHCP). Do nothing option will not modify any BMC network parameters during BIOS phase. Options available: Unspecified/Static/DynamicBmcDhcp. Default setting is **DynamicBmcDhcp**.
Station IP address	Displays IP Address information.
Subnet mask	Displays Subnet Mask information.
Router IP address	Displays the Router IP Address information.
Station MAC address	Displays the MAC Address information.
Real-time synchronize BMC network parameter values	Press [Enter] to synchronize the BMC network parameter values.

5-6-4 IPv6 BMC Network Configuration

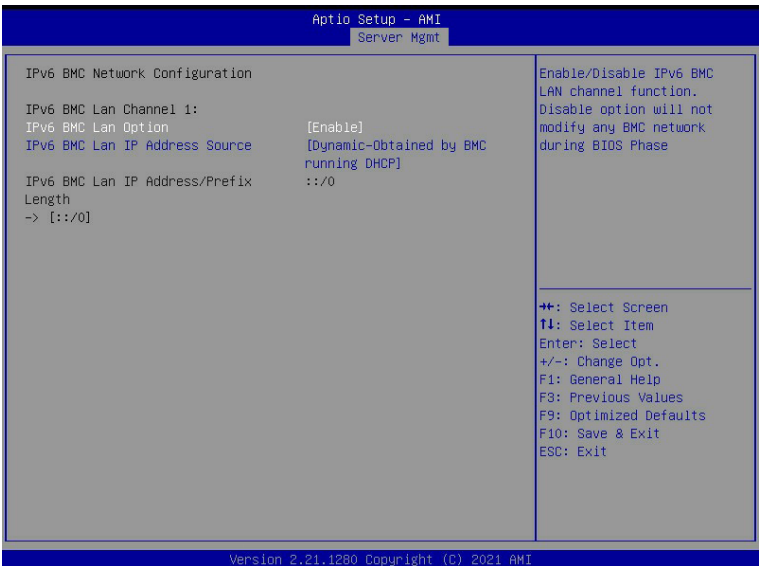

Parameter	Description
IPv6 BMC Network Configuration	
IPv6 BMC Lan Channel 1	
IPv6 BMC Lan Option	Enable/Disable IPv6 BMC LAN channel function. When this item is disabled, the system will not modify any BMC network during BIOS phase. Options available: Unspecified/Disable/Enable. Default setting is **Enable**.
IPv6 BMC Lan IP Address Source	Select to configure LAN channel parameters statically or dynamically (by BIOS or BMC). Options available: Unspecified/Static/Dynamic-Obtained by BMC running DHCP. Default setting is **Dynamic-Obtained by BMC running DHCP**.
IPv6 BMC Lan IP Address/ Prefix Length	Check if the IPv6 BMC LAN IP address matches those displayed on the screen.

5-7 Security Menu

The Security menu allows you to safeguard and protect the system from unauthorized use by setting up access passwords.

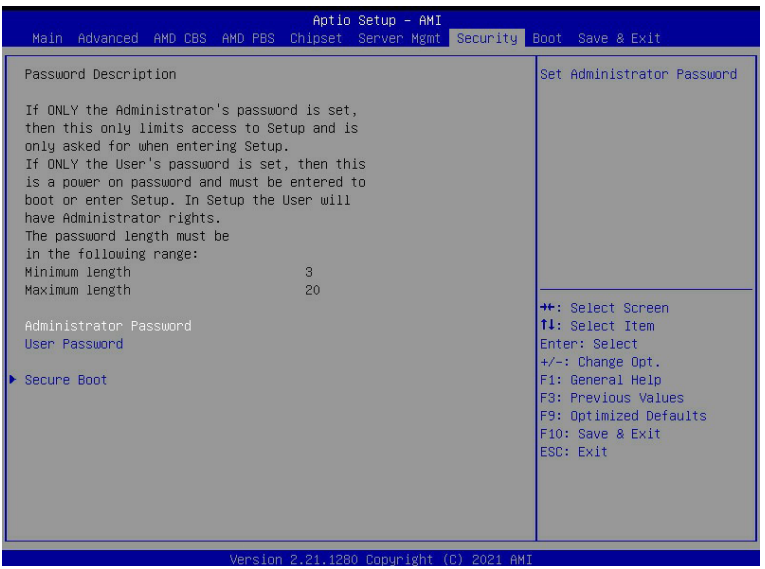

There are two types of passwords that you can set:

- Administrator Password

  Entering this password will allow the user to access and change all settings in the Setup Utility.

- User Password

  Entering this password will restrict a user's access to the Setup menus. To enable or disable this field, a Administrator Password must first be set. A user can only access and modify the System Time, System Date, and Set User Password fields.

Parameter	Description
Administrator Password	Press [Enter] to configure the administrator password.
User Password	Press [Enter] to configure the user password.
Secure Boot	Press [Enter] to configure advanced items.

5-7-1 Secure Boot



Parameter	Description
System Mode	Displays the system is in User mode or Setup mode.
Secure Boot	Enables/Disables Secure Boot. The mode change requires a platform reset. Options available: Disabled/Enabled. Default setting is **Disabled**.
Secure Boot Mode(Note)	Secure Boot requires all the applications that are running during the booting process to be pre-signed with valid digital certificates. This way, the system knows all the files being loaded before Windows loads and gets to the login screen have not been tampered with. When set to Standard, it will automatically load the Secure Boot keys form the BIOS databases. When set to Custom, you can customize the Secure Boot settings and manually load its keys from the BIOS database. Options available: Standard/Custom. Default setting is **Custom**.
Restore Factory Keys	Forces the system to user mode and installs factury default Secure Boot key database.
Key Management	Press [Enter] to configure advanced items. **Please note that this item is configurable when Secure Boot Mode is set to Custom.**

(Note) Advanced items prompt when this item is set to **Custom**.

Parameter	Description
Key Management (continued)	◆ Factory Key Provision – Installs factory default Secure Boot keys after the platform resets and the system is in Setup Mode. – Options available: Disabled/Enabled. Default setting is Disabled. ◆ Restore Factory Keys – Installs factory default Secure Boot key databases. It will force the system in User Mode. – Options available: Yes/No. ◆ Enroll Efi Image – Press [Enter] to enroll SHA256 hash of the binary into Authorized Signature Database (db). ◆ Restore DB defaults – Press [Enter] to restore DB variable to factory defaults. – Options available: Yes/No. ◆ Secure Boot variable – Displays the current status of the variables used for secure boot. ◆ Platform Key (PK) – Displays the current status of the Platform Key (PK). – Press [Enter] to configure a new PK. – Options available: Set Update. ◆ Key Exchange Keys (KEK) – Displays the current status of the Key Exchange Key Database (KEK). – Press [Enter] to configure a new KEK or load additional KEK from storage devices. – Options available: Set Update/Append. ◆ Authorized Signatures (DB) – Displays the current status of the Authorized Signature Database. – Press [Enter] to configure a new DB or load additional DB from storage devices. – Options available: Set Update/Append. ◆ Forbidden Signatures (DBX) – Displays the current status of the Forbidden Signature Database. – Press [Enter] to configure a new dbx or load additional dbx from storage devices. – Options available: Set Update/Append. ◆ Authorized TimeStamps (DBT) – Displays the current status of the Authorized TimeStamps Database. – Press [Enter] to configure a new DBT or load additional DBT from storage devices. – Options available: Set Update/Append. ◆ OsRecovery Signatures – Displays the current status of the OsRecovery Signature Database. – Press [Enter] to configure a new OsRecovery Signature or load additional OsRecovery Signature from storage devices. – Options available: Set Update/Append.

5-8 Boot Menu

The Boot menu allows you to set the drive priority during system boot-up. BIOS setup will display an error message if the legacy drive(s) specified is not bootable.

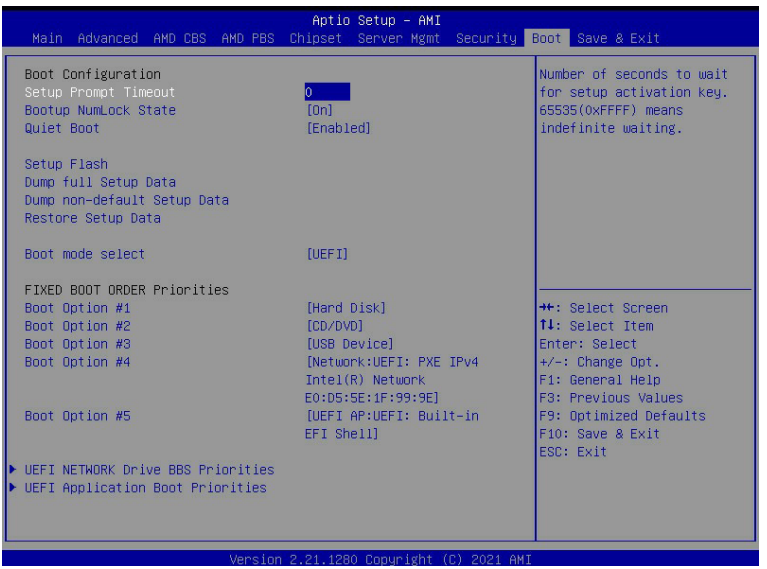

Parameter	Description
Boot Configuration	
Setup Prompt Timeout	Number of seconds to wait for setup activation key. 65535 (0xFFFF) means indefinite waiting. Press the numeric keys to input the desired values.
Bootup NumLock State	Enable/Disable the Bootup NumLock function. Options available: On/Off. Default setting is **On**.
Quiet Boot	Enable/Disable showing the logo during POST. Options available: Disabled/Enabled. Default setting is **Enabled**.
Boot mode select	Selects the boot mode. Options available: LEGACY/UEFI. Default setting is **UEFI**.
FIXED BOOT ORDER Priorities	
Boot Option #1 / #2 / #3 / #4 / #5	Press [Enter] to configure the boot priority. By default, the server searches for boot devices in the following sequence: 1. Hard drive. 2. CD-COM/DVD drive. 3. USB device. 4. Network. 5. UEFI.

Parameter	Description
UEFI Network Drive BBS Priorities	Press [Enter] to configure the boot priority.
UEFI Application Boot Priorities	Press [Enter] to configure the boot priority.

5-8-1 UEFI NETWORK Drive BBS Priorities

The UEFI network drive BBS priorities submenu allows you to specify the boot device priority from the available UEFI network drives during system boot-up. BIOS setup will display an error message if the legacy drive(s) specified is not bootable.



5-8-2 UEFI Application Boot Priorities

The UEFI application boot priorities submenu allows you to specify the boot device priority from the available UEFI applications during system boot-up. BIOS setup will display an error message if the legacy drive(s) specified is not bootable.



5-9 Save & Exit Menu

The Exit menu displays the various options to quit from the BIOS setup. Highlight any of the exit options then press [Enter].

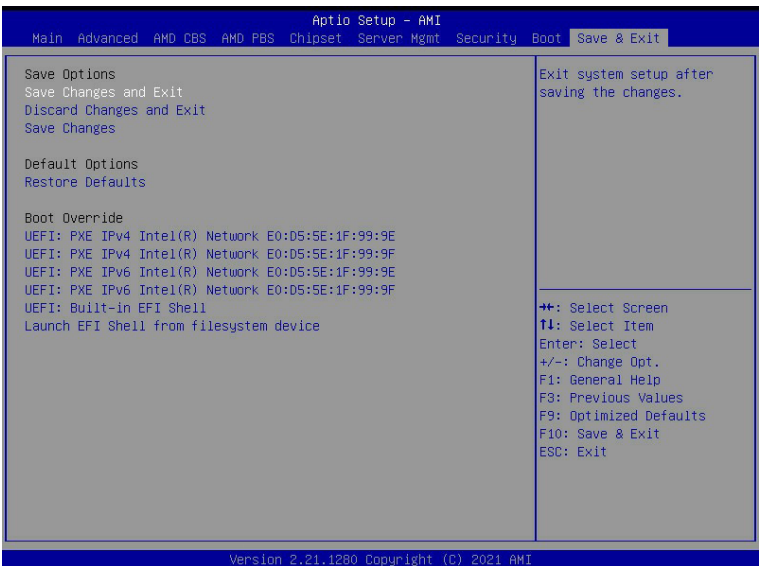

Parameter	Description
Save Options	
Save Changes and Exit	Saves changes made and closes the BIOS setup. Options available: Yes/No.
Discard Changes and Exit	Discards changes made and exits the BIOS setup. Options available: Yes/No.
Save Changes	Save changes done so far to any of the setup options. Options available: Yes/No.
Default Options	
Restore Defaults	Loads the default settings for all BIOS setup parameters. Setup Defaults are quite demanding in terms of resources consumption. If you are using low-speed memory chips or other kinds of low-performance components and you choose to load these settings, the system might not function properly. Options available: Yes/No.
Boot Override	Press [Enter] to configure the device as the boot-up drive.
Launch EFI Shell from filesystem device	Attempts to Launch EFI Shell application (Shell.efi) from one of the available filesystem devices.

5-10 BIOS POST Beep code (AMI standard)

5-10-1 PEI Beep Codes

# of Beeps	Description
1	Memory not Installed.
1	Memory was installed twice (InstallPeiMemory routine in PEI Core called twice)
2	Recovery started
3	DXEIPL was not found
3	DXE Core Firmware Volume was not found
4	Recovery failed
4	S3 Resume failed
7	Reset PPI is not available

5-10-2 DXE Beep Codes

# of Beeps	Description
1	Invalid password
4	Some of the Architectural Protocols are not available
5	No Console Output Devices are found
5	No Console Input Devices are found
6	Flash update is failed
7	Reset protocol is not available
8	Platform PCI resource requirements cannot be met